171501410/P1 11/2022

P 901 CH

IT **Tosaerba con conducente a bordo seduto** - MANUALE DI ISTRUZIONI

ATTENZIONE: prima di usare la macchina, leggere attentamente il presente libretto.

CS **Sekačka se sedící obsluhou** - NÁVOD K POUŽITÍ

UPOZORNĚNÍ: před použitím stroje si pozorně přečtěte tento návod k použití.

DA **Havetraktor/Havetraktor med frontklipper (FM)** - BRUGSANVISNING

ADVARSEL: læs instruktionsbogen omhyggeligt igennem, før du tager denne maskine i brug.

DE **Aufsitzmäher (Rasenmäher mit Fahrersitz mit sitzendem Benutzer)** GEBRAUCHSANWEISUNG

ACHTUNG: vor inbetriebnahme des geräts die gebrauchsanleitung aufmerksam lesen.

EN **Ride-on lawnmower with seated operator** - OPERATOR'S MANUAL

WARNING: read thoroughly the instruction booklet before using the machine.

ES **Cortadora de pasto con conductor sentado** - MANUAL DE INSTRUCCIONES

ATENCIÓN: antes de utilizar la máquina, leer atentamente el presente manual.

ET **Istuva juhiga muruniitja** - KASUTUSJUHEND

TÄHELEPANU: enne masina kasutamist lugeda tähelepanelikult antud kasutusjuhendit.

FI **Päältäajettava ruohonleikkuri** - KÄYTTÖOHJEET

VAROITUS: lue käyttöopas huolellisesti ennen koneen käyttöä.

FR **Tondeuse à gazon à conducteur assis** - MANUEL D'UTILISATION

ATTENTION: lire attentivement le manuel avant d'utiliser cette machine.

HR **Sjedeća kosilica trave s operaterom** - PRIRUČNIK ZA UPORABU

POZOR: prije uporabe stroja, pažljivo pročitajte ovaj priručnik.

HU **Vezetőüléses fűnyírógép** - HASZNÁLATI UTASÍTÁS

FIGYELEM! a gép használata előtt olvassa el figyelmesen a jelen kézikönyvet.

LT **Balninė vejapjovė su sėdinčiu operatoriumi** - NAUDOJIMO INSTRUKCIJOS

DĖMESIO: prieš naudojant įrenginį, atidžiai perskaityti šį naudotojo vadovą.

LV **Sēžot vadāma zālienu pļaujmašīna** - LIETOŠANAS INSTRUKCIJA

UZMANĪBU: pirms aparāta lietošanai rūpīgi izlasiet doto instrukciju.

NL **Grasmaaier met zittende bediener** - GEBRUIKERSHANDLEIDING

LET OP: vooraleer de machine te gebruiken, dient men deze handleiding aandachtig te lezen.

NO **Sittegressklipper** - INSTRUKSJONSBOK

ADVARSEL: les denne bruksanvisningen nøye før du bruker maskinen.

PL **Kosiarka z operatorem jadącym, w pozycji siedzącej na maszynie** INSTRUKCJE OBSŁUGI

OSTRZEŻENIE: przed użyciem maszyny, należy uważnie przeczytać niniejszą instrukcję.

PT **Corta-relvas para operador sentado** - MANUAL DE INSTRUÇÕES

ATENÇÃO: antes de usar a máquina, leia atentamente o presente manual.

RU **Ездовая косилка с сиденьем** РУКОВОДСТВО ПО ЭКСПЛУАТАЦИИ

ВНИМАНИЕ: прежде чем пользоваться оборудованием, внимательно прочтите это руководство по эксплуатации.

SL **Traktorska kosilnica** - PRIROČNIK ZA UPORABO

POZOR: preden uporabite stroj, pazljivo preberite priročnik z navodili.

SV **Åkgräsklippare och främre klippning (FM)** - BRUKSANVISNING

VARNING: läs igenom hela detta häfte innan du använder maskinen.

ITALIANO - **Istruzioni Originali** ..... IT

ČESKY - Překlad původního návodu k používání ..... CS

DANSK - Oversættelse af den originale brugsanvisning ..... DA

DEUTSCH - Übersetzung der Originalbetriebsanleitung ..... DE

ENGLISH - Translation of the original instruction ..... EN

ESPAÑOL - Traducción del Manual Original ..... ES

EESTI - Algupärase kasutusjuhendi tõlge ..... ET

SUOMI - Alkuperäisten ohjeiden käännös ..... FI

FRANÇAIS - Traduction de la notice originale ..... FR

HRVATSKI - Prijevod originalnih uputa ..... HR

MAGYAR - Eredeti használati utasítás fordítása ..... HU

LIETUVIŠKAI - Originalių instrukcijų vertimas ..... LT

LATVIEŠU - Instrukciju tulkojums no oriģināl valodas LV

NEDERLANDS - Vertaling van de oorspronkelijke gebruiksaanwijzing ..... NL

NORSK - Oversettelse av den originale bruksanvisningen ..... NO

POLSKI - Tłumaczenie instrukcji oryginalnej ..... PL

PORTUGUÊS - Tradução do manual original ..... PT

РУССКИЙ - Перевод оригинальных инструкций ..... RU

SSLOVENŠČINA - Prevod izvirnih navodil ..... SL

SVENSKA - Översättning av bruksanvisning i original ..... SV

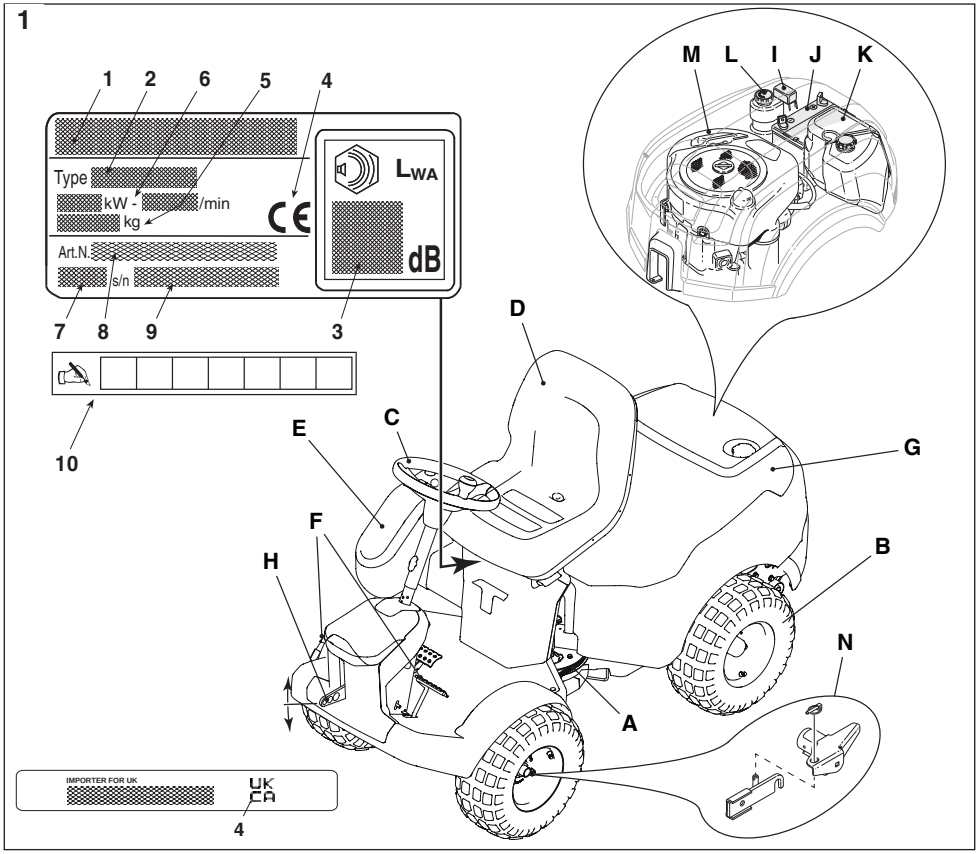
1
1
2
6
5
4
Type
kW -
/min
kg
Art.N.
s/n
LWA
dB
7
8
9
3
10
M
L
I
J
K
D
C
E
G
F
H
B
N
A
IMPORTER FOR UK
UK
CA
4

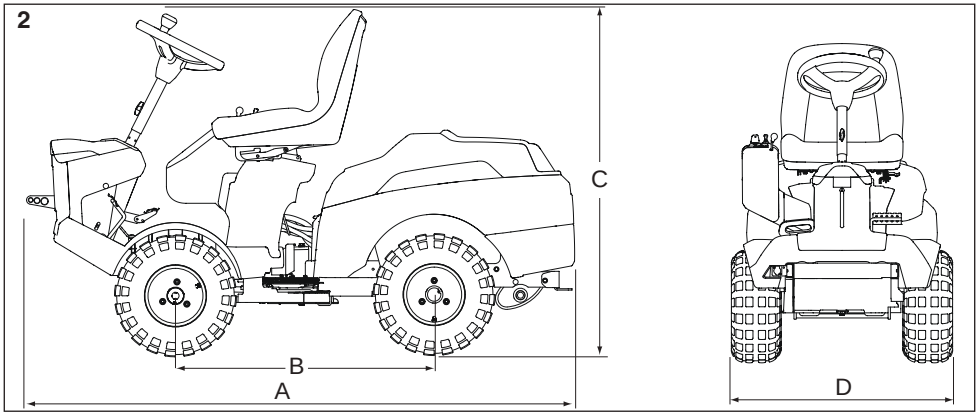
2
C
B
A
D

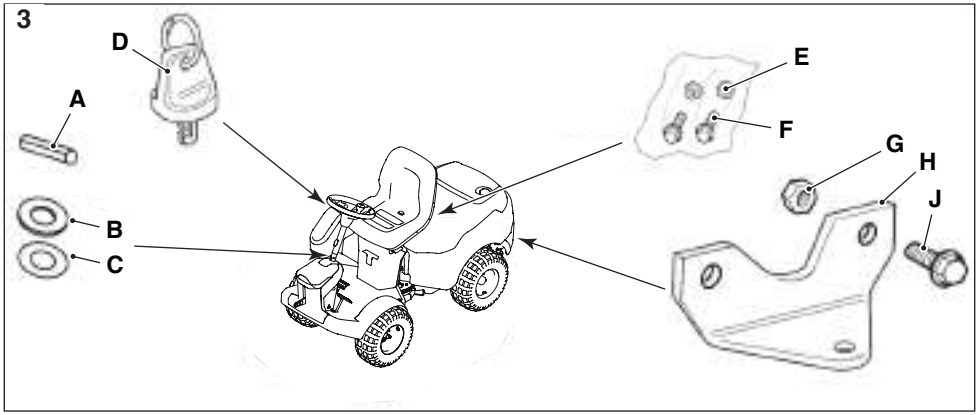
3
D
A
B
C
E
F
G
H
J

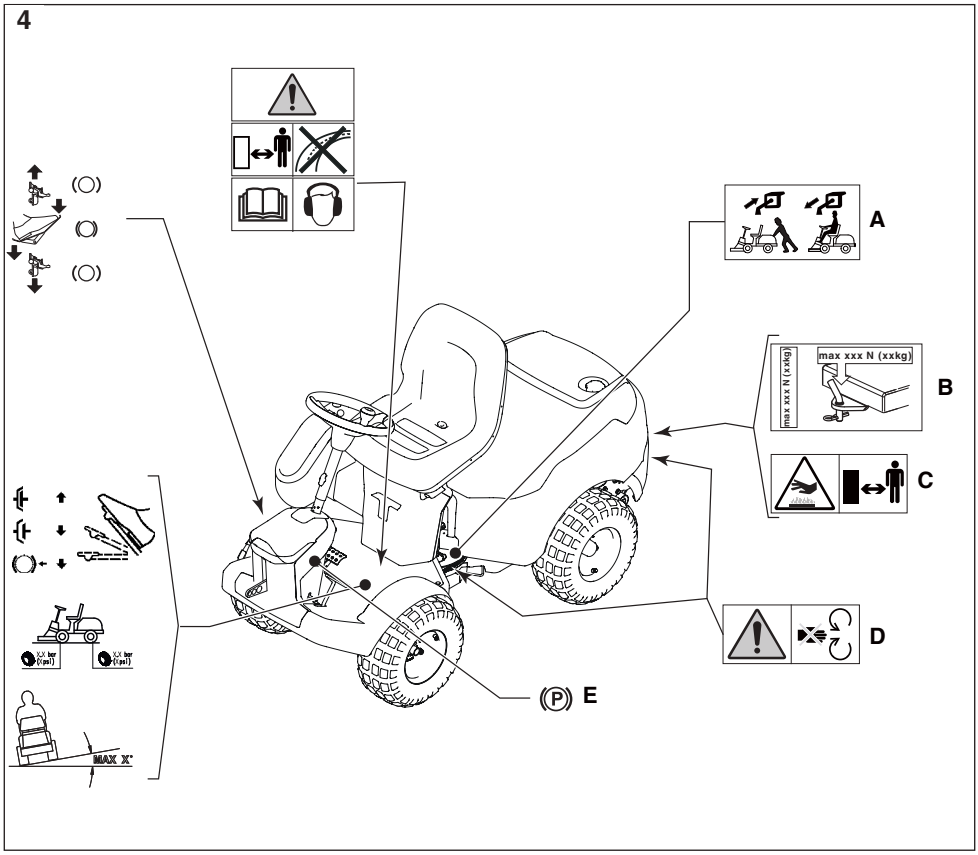
4
A
max xxx N (xxkg)
max xxx N (xxkg)
B
C
D
E
MAX X°

5

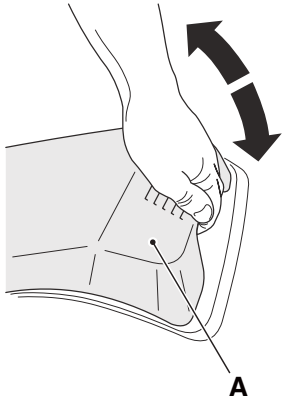

6

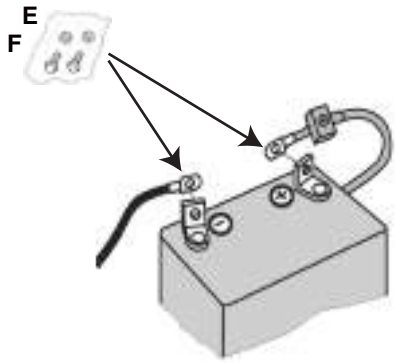

7

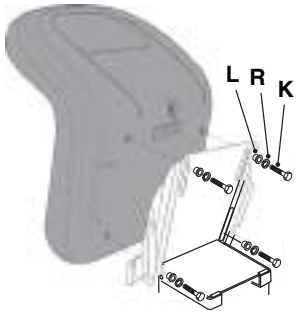

8

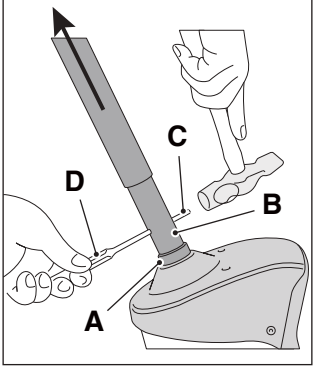

9

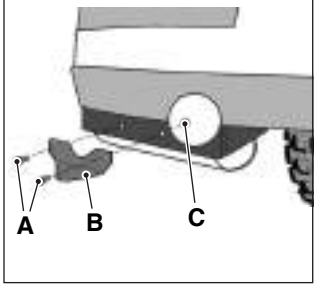

10

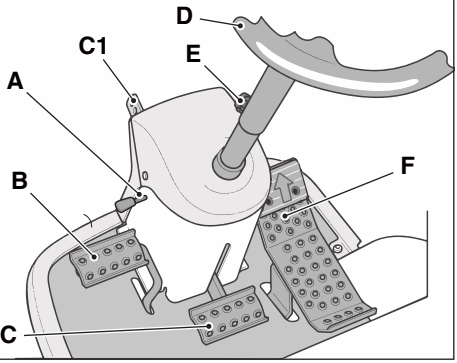

11 [B&S Vanguard]

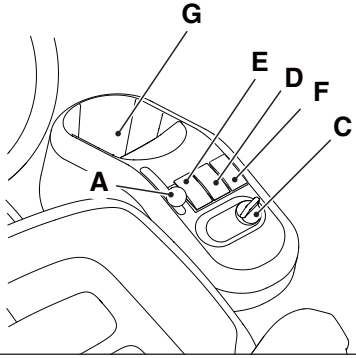

12 [ST.]

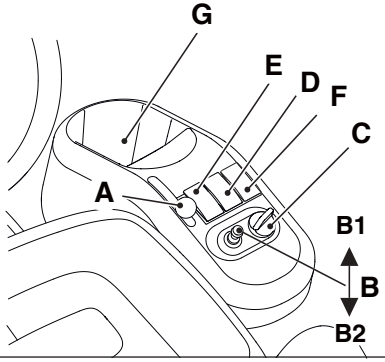

13

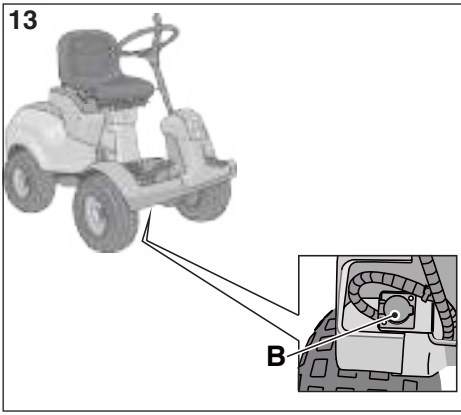

14 2WD

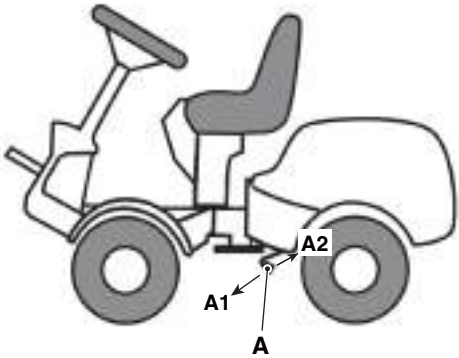

15 4WD

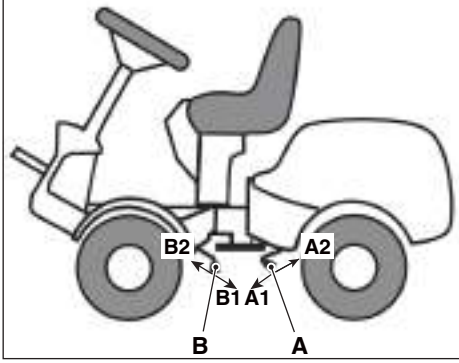

16

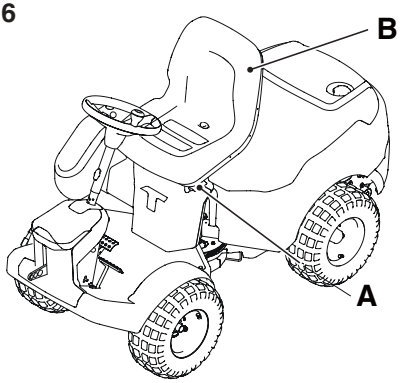

17

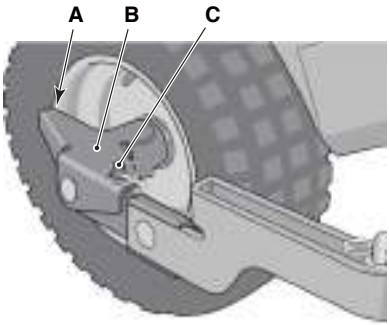

18

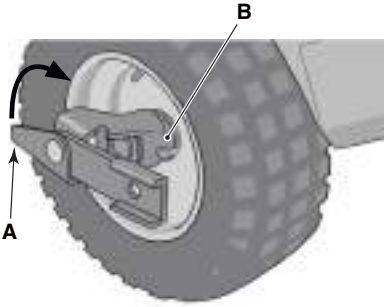

19

20

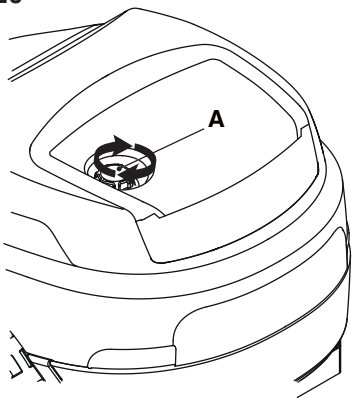

21 [ST. TRE 0801] [ST. TRE 586V]

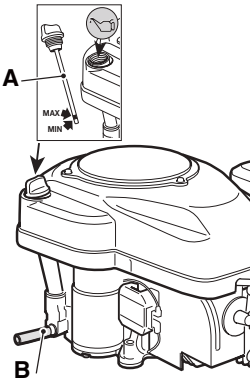

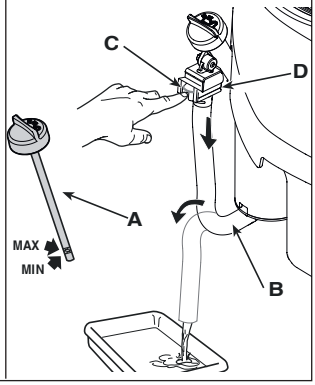

22 [B&S Vanguard]

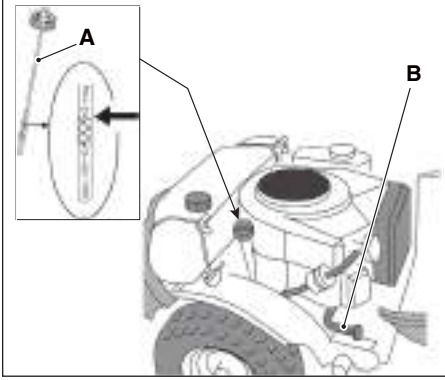

23

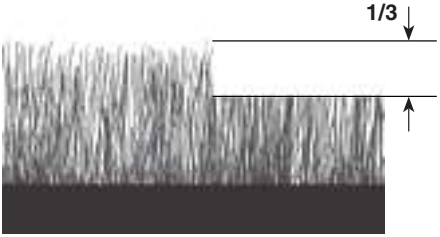

24

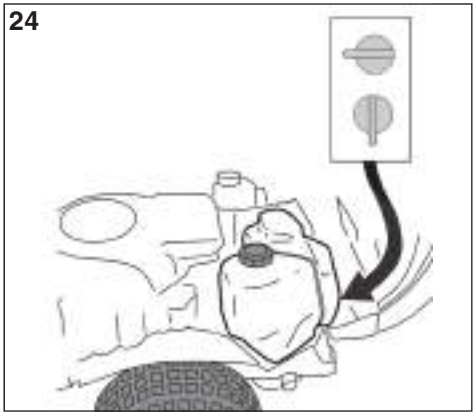

26

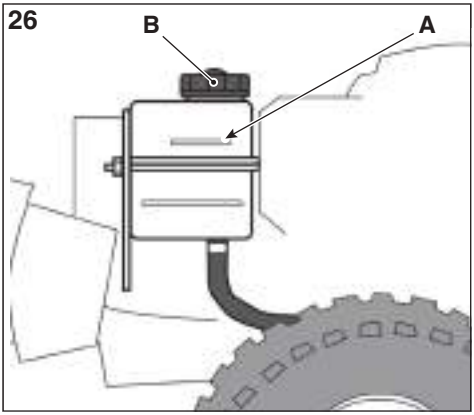

27 4WD

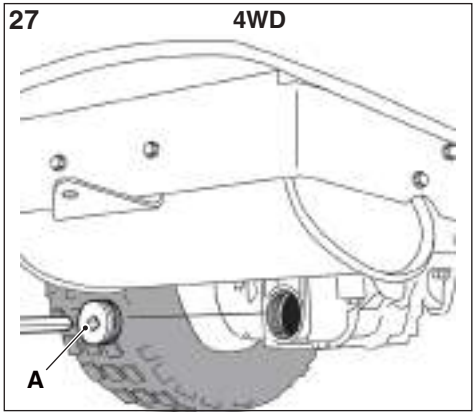

28

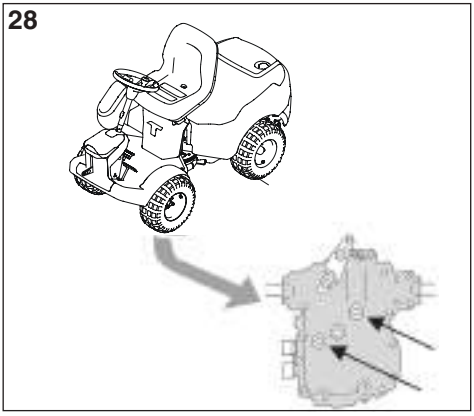

29 4WD

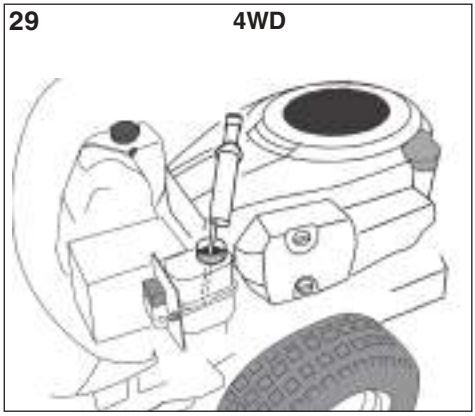

30 4WD

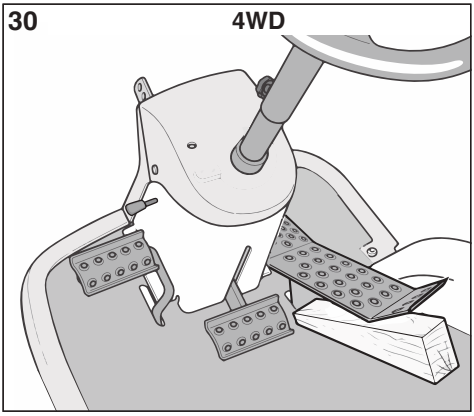

31

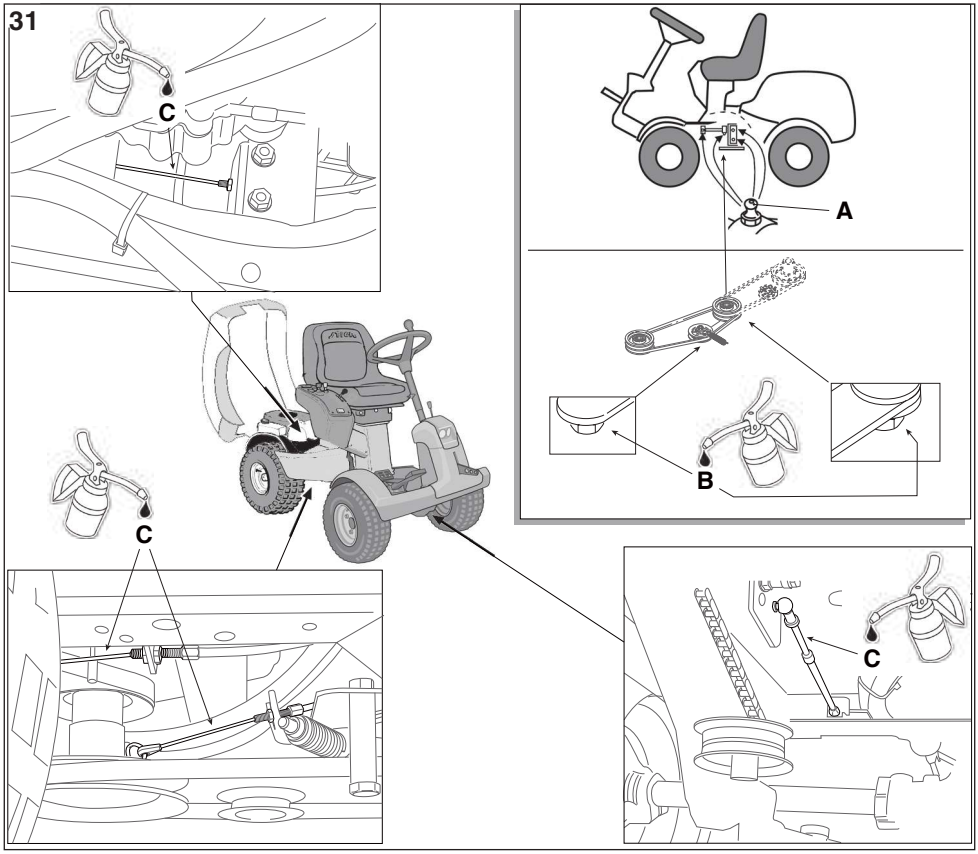

32

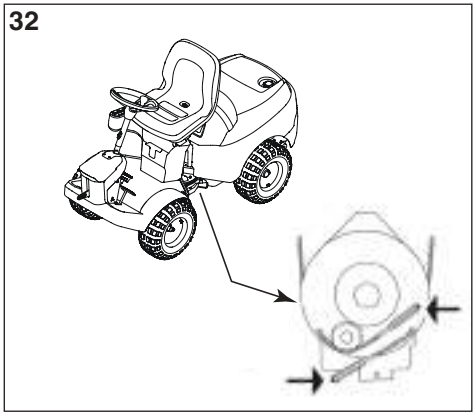

33 [B&S Vanguard]

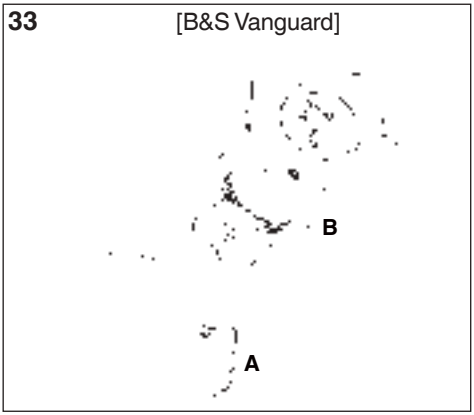

34 [ST.]

TRE 586V

TRE 0801

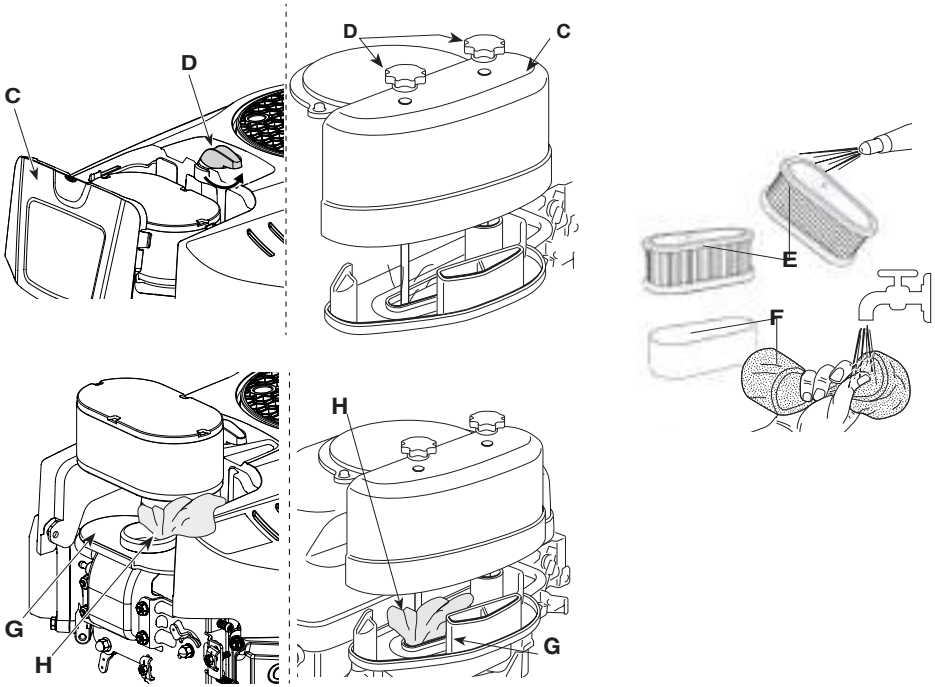

35

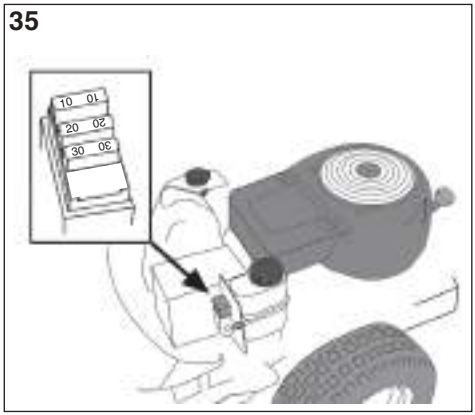

0 TABELLA DATI TECNICI

[1]	**Type**		**P 901 CH**	**P 901 CH**	**P 901 CH**
[2]	**Modello**		**PARK 700 W**	**PARK 700 WX**	**PARK 900 WX**
[3]	Motore		ST600 (TRE 586V)	ST600 (TRE 586V)	ST650 (TRE 635V)
[4]	Cilindrata	cc	586	586	635
[5]	Trazione		2WD	4WD	4WD
[6]	Potenza	kW	11,9	11,9	13,7
[7]	Giri motore	rpm	3200	3200	3200
[8]	Impianto elettrico		12 V	12 V	12 V
[9]	Batteria		VRLA	VRLA	VRLA
[10]	Carburante		[A] Benzina senza piombo	[A] Benzina senza piombo	[A] Benzina senza piombo
[11]	Capacità serbatoio carburante	l	12	12	12
[12]	Olio motore		SAE 10W-30	SAE 10W-30	SAE 10W-30
[13]	Olio motore, classe di servizio		[A] SJ o superiore	[A] SF-SG o superiore	[A] SJ o superiore
[14]	Capacità serbatoio olio motore, senza sostituzione del filtro	l	1,4	1,7	1,7
[15]	Capacità serbatoio olio motore, con sostituzione del filtro	l	1,5	/	/
[16]	Olio Trasmissione		5W-40 / 5W-50	5W-50	5W-50
[17]	Quantità olio trasmissione al momento del cambio	l	3,6	3,6	3,6
[18]	Candela		[A] Champion RN9YC o equivalente.	[A] Champion RN9YC o equivalente.	[A] Champion RN9YC o equivalente.
[19]	Candela, distanza elettrodi	mm	0,6÷0,8	0,6 ÷ 0,8	0,6 ÷ 0,8
[20]	Pneumatici	dim.	16x7.50-8	16x7.50-8	16x7.50-8
[21]	Pressione pneumatici	anteriore	bar 0,6 - psi 9	bar 0,6 - psi 9	bar 0,6 - psi 9
		posteriore	bar 0,4 - psi 6	bar 0,4 - psi 6	bar 0,4 - psi 6
[22]	Altezza di taglio	mm	[A] *Per l'altezza di taglio, vedere la "Tabella Dati Tecnici" del manuale* "assieme del dispositivo *di taglio"*		
[23]	Velocità di avanzamento (indicativa), in marcia avanti	km/h	10	10	10
[24]	Velocità di avanzamento (indicativa), in retromarcia	km/h	6	6	6
[25]	Massa della macchina con serbatoio vuoto	kg	180÷230		
[26]	A = Lunghezza	mm	1960	1960	1960
[27]	B = Passo	mm	992,5	992,5	992,5
[28]	C = Altezza	mm	1236	1236	1236
[29]	D = Larghezza	mm	864	864	864
[30]	Livello di potenza sonora misurato	dB(A)	100	100	100
[31]	Incertezza	dB(A)	0,64	0,64	0,7
[32]	Livello di potenza sonora garantito	dB(A)	100	100	100
[33]	Livello di pressione sonora	dB(A)	85	85	85
[34]	Incertezza	dB(A)	1,45	1,45	0,6
[35]	Valore delle vibrazioni al posto di guida	m/s^2	0,7	0,7	0,9

0 TABELLA DATI TECNICI

[36]	Incertezza	m/s^2	0,17	0,17	0,18
[37]	Valore delle vibrazioni al volante	m/s^2	2,8	2,8	2,7
[38]	Incertezza	m/s^2	0,55	0,55	1,5

[39]	**ACCESSORI A RICHIESTA**	
[40]	**Descrizione**	**Type**
[41]	Rimorchio	45-03453-997 / ST-1405
[42]	Fertilizzatore	45-03153-997
[43]	Raccogli foglie e erba	45-03313-997 **(**)** 45-02616-997 **(**)**
[44]	Rastrello	ST-1407 / ST-1408
[45]	Catene da neve	√
[46]	Ruote da fango / neve	√
[47]	Assieme del dispositivo di taglio	95CP / 95CP E
		95 CP E QF
		100C E
		100C E QF
		105C E
		105C E QF
		110C E
		110C E QF**(**)**
		125C E QF**(**)** *(mod. 620 PW, 640 PWX, 740 PWX)*
[48]	Erpice frontale	PA304 **(**)**
[49]	Trinciatrice	PA409 / PA409 E **(**)**
[50]	Spazzaneve a turbina	PA407 **(**)**
[51]	Spazzatrice frontale	PA501 / PVA101 / FKM 900 KA
[52]	Spalaneve a lama	ST-1404
[53]	Arieggiatore/scarificatore	LAR 1405 / LAR 1405 E
[54]	Contrappesi ruote posteriori	√
[55]	Sollevatore posteriore per accessori	ST-1406
[56]	! **(**) Per i modelli 2WD, è obbligatorio installare i contrappesi sulle ruote posteriori.**	

0 TABELLA DATI TECNICI

[57] **TABELLA PER LA CORRETTA COMBINAZIONE DEGLI ACCESSORI**

		[58] ACCESSORI POSTERIORI					
	Accessorio [60]	[41]	[42]	[43]	[44]	[45]	[46]
[59] ACCESSORI FRONTALI	[45]	√	√	-	-	-	-
	[47]	√ (***)	√	√	√	-	√
	[48]	√	-	-	√	-	-
	[49]	-	-	√	-	-	√
	[50]	-	√	-	-	√	√
	[51]	-	√	-	-	√	√
	[52]	-	√	-	-	√	√
	[53]	-	-	√	-	-	-

[61] **(***) Per i modelli 2WD, con l'applicazione contemporanea dell'assieme dei dispositivi di taglio "type 110C E, 110C E QF, 125C E QF" e del rimorchio è obbligatorio installare i contrappesi sulle ruote posteriori.**

0 TABULKA TECHNICKÝCH ÚDAJŮ

[1]	Typ	
[2]	Model	
[3]	Motor	
[4]	Objem motoru	
[5]	Trakce	
[6]	Výkon	
[7]	Otáčky motoru	
[8]	Elektrický systém	
[9]	Akumulátor	
[10]	Palivo	
[A]	Bezolovnatý benzín	
[11]	Kapacita palivové nádrže	
[12]	Motorový olej	
[13]	Motorový olej, provozní třída	
[A]	SJ nebo vyšší	
[14]	Kapacita olejové nádrže, bez výměny filtru	
[15]	Kapacita olejové nádrže, bez výměny filtru	
[16]	Převodový olej	
[17]	Množství převodového oleje v momentě převodu	
[18]	Svíčka	
[A]	Champion XC12YC nebo ekvivalentní typ	
[19]	Svíčka, vzdálenost elektrod	
[20]	Pneumatiky	
[21]	Tlak v pneumatikách	přední pneumatikách
		zadní pneumatiky
[22]	Výška sekání	
[A]	Informace o výšce sekání naleznete v části “Tabulka technických údajů” manuálu "jednotky sekací jednotky"	
[23]	Rychlost postupu (indikativní) při postupu napřed	
[24]	Rychlost postupu (indikativní) při couvání	
[25]	Hmotnost stroje s prázdnou nádrží	
[26]	A = Délka	
[27]	B = Krok	
[28]	C = Výška	
[29]	D = Šířka	
[30]	Naměřená hladina akustického výkonu	
[31]	Nejistá	
[32]	Garantovaná hladina akustického výkonu	
[33]	Hladina akustického tlaku	
[34]	Nejistá	
[35]	Hodnota vibrací na místě řidiče	
[36]	Nejistá	
[37]	Hodnota vibrací u volantu	
[38]	Nejistá	
[39]	PŘÍSLUŠENSTVÍ NA POŽÁDANÍ	
[40]	Popis	
[41]	Přívěs	

[42]	Rozmetadlo hnojiv
[43]	Sběrač listí a trávy
[44]	Pohrabovač
[45]	Sněhové řetězy
[46]	Kola do bláta / sněhu
[47]	Sekací jednotka
[48]	Přední brána
[49]	Řezačka
[50]	Turbínová sněhová fréza
[51]	Přední zametací zařízení
[52]	Sněhová radlice
[53]	Provzdušňovač/rozrývač
[54]	Protizávaží na zadních kolech
[55]	Zadní zdvih pro příslušenství
[56]	(**) U modelů 2WD, je povinné nainstalovat protizávaží na zadních kolech.
[57]	TABULKA PRO SPRÁVNOU KOMBINACI PŘÍSLUŠENSTVÍ
[58]	ZADNÍ PŘÍSLUŠENSTVÍ
[59]	FŘEDNÍ PŘÍSLUŠENSTVÍ
[60]	Příslušenství
[61]	(***) U modelů 2WD, při současném použití sekacích zařízení "typu 110C E, 110C E QF, 125C E QF" a přípojného vozidla, je povinné nainstalovat protizávaží na zadních kolech.

0 TABEL OVER TEKNISKE SPECIFIKATIONER

[1]	Type	
[2]	Model	
[3]	Motor	
[4]	Cylindervolumen	
[5]	Antrieb	
[6]	Effekt	
[7]	Motoromdrejninger	
[8]	Elektrisk anlæg	
[9]	Batteri	
[10]	Brændstof	
[A]	Blyfri benzin	
[11]	Brændstoftankens rumfang	
[12]	Motorolie	
[13]	Motorolie, klassificering	
[A]	SJ eller højere	
[14]	Motorolietankkapacitet, uden filterudskiftning	
[15]	Motorolietankkapacitet, med filterudskiftning	
[16]	Transmissionsolie	
[17]	Transmissionsoliemængde på udskiftningstidspunktet	
[18]	Tændrør	
[A]	Champion XC12YC oder gleichwertig	
[19]	Tændrør, elektrodeafstand	
[20]	Dæk	
[21]	Dæktryk	forhjul
		baghjul
[22]	Schnitthöhe	
[A]	Indhent oplysninger om klippehøjden i “Tabel over tekniske specifikationer” i vejledningen “klippeaggregat”	
[23]	Fremføringshastighed (vejledende), i fremgear	
[24]	Fremføringshastighed (vejledende), i bakgear	
[25]	Maskinvægt med tom tank	
[26]	A = Længde	
[27]	B = Akselafstand	
[28]	C = Højde	
[29]	D = Bredde	
[30]	Målt lydeffektniveau	
[31]	Usikkerhed	
[32]	Garanteret lydeffektniveau	
[33]	Lydtrykniveau	
[34]	Usikkerhed	
[35]	Vibrationsværdi ved førerpladsen	
[36]	Usikkerhed	
[37]	Vibrationsværdi ved rattet	
[38]	Usikkerhed	
[39]	EKSTRAUDSTYR	
[40]	Beskrivelse	

[41]	Anhænger
[42]	Gødningsspreder
[43]	Blad- og græsindsamler
[44]	Rive
[45]	Snekæder
[46]	Mudder- og snehjul
[47]	Klippeaggregat
[48]	Frontharve
[49]	Skæremaskine
[50]	Turbineudstyret sneplov
[51]	Frontmonteret fejemaskine
[52]	Sneplov med klinge
[53]	Udluftningsgreb/plænelufter
[54]	Baghjulenes kontravægte
[55]	Udstyrsløfteaggregat bagpå
[56]	(**) Bei den Modellen 2WD ist die Installation der Hinterradgewichte vorgeschrieben.
[57]	TABEL OVER UDSTYRETS KORREKTE KOMBINATION
[58]	BAGMONTERET TILBEHØR
[59]	FORMONTERET TILBEHØR
[60]	Tilbehør
[61]	(***) Bei den Modellen 2WD ist mit gleichzeitigem Einsatz der Baugruppe Schneidvorrichtungen “Typ 110C E, 110C E QF, 125C E QF” und des Anhängers die Installation der Hinterradgewichte vorgeschrieben.

0 ÜBERSICHT DER TECHNISCHEN DATEN

[1]	Typ	
[2]	Modell	
[3]	Motor	
[4]	Hubraum	
[5]	Antrieb	
[6]	Leistung	
[7]	Motordrehzahl	
[8]	Elektrische Anlage	
[9]	Batterie	
[10]	Kraftstoff	
[A]	Bleifreies Benzin	
[11]	Kraftstofftankinhalt	
[12]	Motoröl	
[13]	Motoröl, Betriebsklasse	
[A]	SJ oder höher	
[14]	Inhalt Motorölbehälter, ohne Filteraustausch	
[15]	Inhalt Motorölbehälter, mit Filteraustausch	
[16]	Getriebeöl	
[17]	Getriebeölmenge beim Wechsel	
[18]	Zündkerze	
[A]	Champion XC12YC oder gleichwertig	
[19]	Zündkerze, Elektrodenabstand	
[20]	Bereifung	
[21]	Reifendruck	vorn
		hinten
[22]	Schnitthöhe	
[A]	Für die Schnitthöhe siehe "Übersicht der technischen Daten" in der Anleitung "Baugruppe Mähwerk"	
[23]	Fahrgeschwindigkeit (ca.), vorwärts	
[24]	Fahrgeschwindigkeit (ca.), rückwärts	
[25]	Maschinenmasse bei leerem Tank	
[26]	A = Länge	
[27]	B = Radstand	
[28]	C = Höhe	
[29]	D = Breite	
[30]	Gemessener Schallleistungspegel	
[31]	Messunsicherheit	
[32]	Garantierter Schallleistungspegel	
[33]	Schalldruckpegel	
[34]	Messunsicherheit	
[35]	Vibrationen am Fahrersitz	
[36]	Messunsicherheit	
[37]	Vibrationen am Lenkrad	
[38]	Messunsicherheit	
[39]	SONDERZUBEHÖR	
[40]	Beschreibung:	
[41]	Anhänger	

[42]	Dungstreuer
[43]	Laub- und Grassammler
[44]	Harken
[45]	Schneeketten
[46]	M+S-Räder (Matsch- und Schneeräder)
[47]	Baugruppe Mähwerk
[48]	Frontegge
[49]	Häcksler
[50]	Schneefräse
[51]	Kehrvorsatz
[52]	Schneepflug
[53]	Vertikutierer/Lockerer
[54]	Hinterradgewichte
[55]	Heckseitiger Geräteheber
[56]	(**) Bei den Modellen 2WD ist die Installation der Hinterradgewichte vorgeschrieben.
[57]	ÜBERSICHT FÜR DIE KORREKTE ZUBEHÖR-KOMBINATION
[58]	HECKSEITIGES ZUBEHÖR
[59]	FRONTSEITIGES ZUBEHÖR
[60]	Zubehör
[61]	(***) Bei den Modellen 2WD ist mit gleichzeitigem Einsatz der Baugruppe Schneidvorrichtungen “Typ 110C E, 110C E QF, 125C E QF” und des Anhängers die Installation der Hinterradgewichte vorgeschrieben.

0 TECHNICAL DATA TABLE

[1]	Type	
[2]	Model	
[3]	Engine	
[4]	Engine displacement	
[5]	Traction	
[6]	Power	
[7]	Engine revs	
[8]	Electrical System	
[9]	Battery	
[10]	Fuel	
[A]	Unleaded petrol	
[11]	Fuel tank capacity	
[12]	Engine oil	
[13]	Engine oil, service category	
[A]	SJ or higher	
[14]	Engine oil tank capacity, without filter change	
[15]	Engine oil tank capacity, with filter change	
[16]	Transmission fluid	
[17]	Quantity of transmission fluid required for fluid change	
[18]	Spark plug	
[A]	Champion XC12YC or equivalent	
[19]	Spark gap	
[20]	Tyres	
[21]	Tyre pressure	front
		rear
[22]	Cutting height	
[A]	For the cutting height, please refer to the "Technical Data Table" in the cutting device assy manual.	
[23]	Forward travel speed (indicative)	
[24]	Reverse travel speed (indicative)	
[25]	Machine weight with empty tank	
[26]	A = Length	
[27]	B = Pitch	
[28]	C = Height	
[29]	D = Width	
[30]	Measured sound power level	
[31]	Uncertainty	
[32]	Guaranteed sound power level	
[33]	Sound pressure level	
[34]	Uncertainty	
[35]	Vibration value in the driver's seat	
[36]	Uncertainty	
[37]	Vibration value in the steering wheel	
[38]	Uncertainty	
[39]	ACCESSORIES AVAILABLE ON REQUEST	
[40]	Description	
[41]	Trailer	

[42]	Fertilizer spreader
[43]	Grass and leaf collector
[44]	Rake
[45]	Snow chains
[46]	Mud / Snow wheels
[47]	Cutting device assy
[48]	Front harrow
[49]	"Shredder
[50]	Snow thrower
[51]	Front sweeper
[52]	Blade type snow plough
[53]	Aerator/scarifier
[54]	Rear wheel counterweights
[55]	Rear lifting assembly for accessories
[56]	(**) For 2WD models, counterweights must be installed on the rear wheels.
[57]	TABLE FOR CORRECT ACCESSORY COMBINA-TIONS
[58]	REAR ACCESSORIES
[59]	FRONT ACCESSORIES
[60]	Accessory
[61]	(***) For 2WD models, when the cutting device assies (type 110C E, 110C E QF, 125C E QF) are installed at the same time as the trailer, counterweights must be installed on the rear wheels.

0 TABLA DE DATOS TÉCNICOS

[1]	Tipo	
[2]	Modelo	
[3]	Motor	
[4]	Cilindrada	
[5]	Tracción	
[6]	Potencia	
[7]	Revoluciones del motor	
[8]	Sistema eléctrico	
[9]	Batería	
[10]	Carburante	
[A]	Gasolina sin plomo	
[11]	Capacidad del depósito de carburante	
[12]	Aceite motor	
[13]	Aceite motor, tipo de servicio	
[A]	SJ o superior	
[14]	Capacidad del depósito de aceite del motor, sin cambio de filtro	
[15]	Capacidad del depósito de aceite del motor, con cambio de filtro	
[16]	Aceite de transmisión	
[17]	Cantidad de aceite de transmisión al efectuar el cambio	
[18]	Bujía	
[A]	Champion XC12YC o equivalente	
[19]	Bujía, distancia electrodos	
[20]	Neumáticos	
[21]	Presión de neumáticos	delantera
		trasera
[22]	Altura de corte	
[A]	Para más información sobre la altura de corte, consulte la “Tabla de Datos Técnicos” del manual “grupo del dispositivo de corte”	
[23]	Velocidad de avance (indicativa) con marcha adelante	
[24]	Velocidad de avance (indicativa) con marcha atrás	
[25]	Peso de la máquina con el depósito de combustible vacio	
[26]	A = Longitud	
[27]	B = Paso	
[28]	C = Altura	
[29]	D = Anchura	
[30]	Nivel de potencia sonora medido	
[31]	Incertidumbre	
[32]	Nivel de potencia sonora garantizado	
[33]	Nivel de presión sonora	
[34]	Incertidumbre	
[35]	Valor de las vibraciones en el puesto de conducción	
[36]	Incertidumbre	
[37]	Valor de vibraciones en el volante	

[38]	Incertidumbre
[39]	ACCESORIOS BAJO PEDIDO
[40]	Descripción
[41]	Remolque
[42]	Fertilizador
[43]	Recoge hojas e hierba
[44]	Rastrillo
[45]	Cadenas para nieve
[46]	Ruedas para fango y nieve
[47]	Grupo del dispositivo de corte
[48]	Arado frontal
[49]	Trituradora
[50]	Quitanieves
[51]	Quitanieves frontal
[52]	Quitanieves de cuchilla
[53]	Aireador/escarificador
[54]	Contrapesos ruedas traseras
[55]	Elevador trasero para accesorios
[56]	(**) En los modelos 2WD, es obligatorio instalar los contrapesos en las ruedas traseras.
[57]	TABLA PARA COMBINAR ACCESORIOS
[58]	ACCESORIOS TRASEROS
[59]	ACCESORIOS FRONTALES
[60]	Accesorio
[61]	(***) En los modelos 2WD, cuando el grupo de dispositivos de corte “type 110C E, 110C E QF, 125C E QF” y el remolque se aplican contemporáneamente, es obligatorio instalar los contrapesos en las ruedas traseras.

0 TEHNILISTE ANDMETE TABEL

[1]	Tüüp	
[2]	Mudel	
[3]	Mootor	
[4]	Silindrid	
[5]	Vedu	
[6]	Võimsus	
[7]	Mootori pöörete arv	
[8]	Elektriseade	
[9]	Aku	
[10]	Kütus	
[A]	Pliivaba bensiin	
[11]	Kütusepaagi maht	
[12]	Mootoriõli	
[13]	Mootoriõli, teenindusklass	
[A]	SJ ja parem	
[14]	Mootoriõli paagi maht, ilma filtri asenduseta	
[15]	Mootoriõli paagi maht, koos filtri asendusega	
[16]	Ülekandeõli	
[17]	Ülekandeõli maht vahetamise ajal	
[18]	Küünal	
[A]	Champion XC12YC või samaväärne	
[19]	Küünal, elektroodide vahemaa	
[20]	Rehvid	
[21]	Rehvirõhk	ees
		taga
[22]	Niitmiskõrgus	
[A]	Niitmiskõrgust vaata niitmisseadme juhendis tabelist "Tehnilised andmed"	
[23]	Liikumiskiirus (indikatiivne), edasikäigul	
[24]	Liikumiskiirus (indikatiivne), tagasikäigul	
[25]	Masina mass tühja paagiga	
[26]	A=pikkus	
[27]	B=samm	
[28]	C=kõrgus	
[29]	D=laius	
[30]	Helivõimsuse mõõdetav tase	
[31]	Määramatus	
[32]	Helivõimsuse kindel tase	
[33]	Helirõhu tase	
[34]	Määramatus	
[35]	Vibratsioonid juhikohal	
[36]	Määramatus	
[37]	Vibratsioonid roolil	
[38]	Määramatus	
[39]	TELLIMUSEL LISATARVIKUD	
[40]	Kirjeldus	
[41]	Treiler	
[42]	Väetaja	

[43]	Lehtede ja rohu koguja
[44]	Reha
[45]	Lumeketid
[46]	Lume- ja mudarattad
[47]	Niitmisseade
[48]	Esiäke
[49]	Purustaja
[50]	Turbiiniga lumepühkija
[51]	Eesmine koristusseade
[52]	Lumesahk
[53]	Kobestaja
[54]	Tagumiste rataste vastukaalud
[55]	Tagumine tõstuk tarvikute jaoks
[56]	(**) 2WD mudelitel on kohustuslik paigaldada taga-ratastele vastukaalud
[57]	TARVIKUTE ÕIGE KOMBINEERIMISE TABEL
[58]	TAGUMISED TARVIKUD
[59]	EESMISED TARVIKUD
[60]	Tarvik
[61]	(***) 2WD mudelitel "110C E, 110C E QF, 125C E QF tüüpi" niitmisseadme ja treileri samaaegsel kasutamisel on kohustuslik paigaldada tagaratastele vastukaalud

0 TEKNISTEN TIETOJEN TAULUKKO

[1]	Tyyppi	
[2]	Malli	
[3]	Moottori	
[4]	Sylinteritilavuus	
[5]	Veto	
[6]	Teho	
[7]	Moottorin kierrosluku	
[8]	Sähkölaitteisto	
[9]	Akku	
[10]	Polttoneste	
[A]	Lyijytön bensiini	
[11]	Polttonestesäiliön tilavuus	
[12]	Moottoriöljy	
[13]	Moottoriöljy, luokitus	
[A]	SJ tai suurempi	
[14]	Moottoriöljysäiliön tilavuus ilman suodattimen vaihtoa	
[15]	Moottoriöljysäiliön tilavuus suodattimen vaihdon kanssa	
[16]	Vaihteistoöljy	
[17]	Vaihteistoöljyn määrä vaihdon hetkellä	
[18]	Sytytystulppa	
[A]	Champion XC12YC tai vastaava	
[19]	Sytytystulppa, elektrodien välinen etäisyys	
[20]	Renkaat	
[21]	Renkaiden paine	etu
		taka
[22]	Leikkuukorkeus	
[A]	Katso tietoja leikkuukorkeudesta leikkuulaiteoppaan teknisten tietojen taulukosta.	
[23]	Etenemisnopeus (suuntaa-antava), eteenpäin mentäessä	
[24]	Etenemisnopeus (suuntaa-antava), peruutettaessa	
[25]	Laitteen kuivapaino	
[26]	A = pituus	
[27]	B = akseliväli	
[28]	C = korkeus	
[29]	D = leveys	
[30]	Mitattu äänitehotaso	
[31]	Epävarmuus	
[32]	Taattu äänitehotaso	
[33]	Äänenpainetaso	
[34]	Epävarmuus	
[35]	Värinäarvo ajajan paikalla	
[36]	Epävarmuus	
[37]	Värinäarvo ohjauspyörään	
[38]	Epävarmuus	
[39]	TILATTAVAT LISÄVARUSTEET	
[40]	Kuvaus	

[41]	Perävaunu
[42]	Lannoitin
[43]	Ruoho -ja lehtikerääjä
[44]	Harava
[45]	Lumiketjut
[46]	Muta-/talvipyörät
[47]	Leikkuulaiteyksikkö
[48]	Etuäes
[49]	Silppuri
[50]	Turbiinilumilinko
[51]	Etuharjalaite
[52]	Lumiaura
[53]	Ilmastin/jyrsin
[54]	Takapyörien vastapainot
[55]	Lisävarusteiden takanostin
[56]	(**) 2WD-malleissa on asennettava vastapainot takapyöriin.
[57]	LISÄVARUSTEIDEN OIKEAOPPISEN YHDISTELYN TAULUKKO
[58]	TAKAVARUSTE
[59]	ETUVARUSTE
[60]	Lisävaruste
[61]	(***) 2WD-malleissa , joissa on samanaikaisesti tyypin 110C E, 110C E QF, 125C E QF -leikkuu-laitteet ja perävaunu, takapyöriin on asennettava vastapainot.

0 TABLEAU DONNÉES TECHNIQUES

[1]	Type	
[2]	Modèle	
[3]	Moteur	
[4]	Cylindrée	
[5]	Traction	
[6]	Puissance	
[7]	Tours moteur	
[8]	Installation électrique	
[9]	Batterie	
[10]	Carburant	
[A]	Essence sans plomb	
[11]	Capacité du réservoir de carburant	
[12]	Huile moteur	
[13]	Huile moteur, classe de service	
[A]	SJ ou supérieure	
[14]	Capacité du réservoir huile moteur, sans remplacement du filtre	
[15]	Capacité du réservoir huile moteur, avec remplacement du filtre	
[16]	Huile de transmission	
[17]	Quantité huile de transmission au moment de la vidange	
[18]	Bougie	
[A]	Champion XC12YC ou équivalente	
[19]	Bougie, distance des électrodes	
[20]	Pneus	
[21]	Pression des pneus	avant
		arrière
[22]	Hauteur de coupe	
[A]	Pour la hauteur de coupe, voir le « Tableau Données Techniques » du manuel « ensemble du dispositif de coupe »	
[23]	Vitesse d'avancement (indicative), en marche avant	
[24]	Vitesse d'avancement (indicative), en marche arrière	
[25]	Masse de la machine avec réservoir vide	
[26]	A = Longueur	
[27]	B = Pas	
[28]	C = Hauteur	
[29]	D = Largeur	
[30]	Niveau de puissance sonore mesuré	
[31]	Incertitude	
[32]	Niveau de puissance sonore garanti	
[33]	Niveau de pression sonore	
[34]	Incertitude	
[35]	Valeur des vibrations au poste de conduite	
[36]	Incertitude	
[37]	Valeur des vibrations au volant	
[38]	Incertitude	
[39]	ACCESSOIRES SUR DEMANDE	

[40]	Description
[41]	Remorque
[42]	Fertiliseur
[43]	Ramasse feuilles et herbe
[44]	Râteau
[45]	Chaînes à neige
[46]	Roues complètes boue / neige
[47]	Ensemble du dispositif de coupe
[48]	Herse frontale
[49]	Dispositif à hacher
[50]	Chasse-neige à turbine
[51]	Balayeuse frontale
[52]	Chasse-neige à lame
[53]	Aérateur/scarificateur
[54]	Contrepoids roues arrière
[55]	Élévateur arrière pour accessoires
[56]	(**) Pour les modèles à 2 roues motrices, il est obligatoire d'installer les contrepoids sur les roues arrière.
[57]	TABLEAU POUR LA CORRECTE COMBINAISON DES ACCESSOIRES
[58]	ACCESSOIRES ARRIÈRE
[59]	ACCESSOIRES FRONTAUX
[60]	Accessoire
[61]	(***) Pour les modèles à 2 roues motrices, avec l'application en même temps de l'ensemble des dispositifs de coupe « type 110C E, 110C E QF, 125C E QF » et de la remorque, il est obligatoire d'installer les contrepoids sur les roues arrière.

0 TABLICA S TEHNIČKIM PODACIMA

[1]	Tip	
[2]	Model	
[3]	Motor	
[4]	Obujam	
[5]	Trakcija	
[6]	Snaga	
[7]	Broj okretaja motora	
[8]	Električni sustav	
[9]	Baterija	
[10]	Gorivo	
[A]	Bezolovni benzin	
[11]	Obujam spreminka za gorivo	
[12]	Motorno ulje	
[13]	Klasa motornog ulja	
[A]	SJ ili više	
[14]	Obujam spremnika za ulje motora, bez zamene filtera	
[15]	Obujam spremnika za ulje, sa zamenom filtera	
[16]	Ulje za menjač	
[17]	Količina ulja za mjenjač u prilikom zamijene	
[18]	Svjećica	
[A]	Champion XC12YC ili slično	
[19]	Svjećica, razmak elektroda	
[20]	Gume	
[21]	Tlak guma	prednje
		zadnje
[22]	Visina rezanja	
[A]	Za visinu rezanja pogledajte Tablicu s tehničkim podacima" u priručniku za "rezno kućište"	
[23]	Brzina hoda (indikativna) prema naprijed	
[24]	Brzina hoda (indikativna) prema nazad	
[25]	Masa stroja s praznim spremnikom	
[26]	A = Dužina	
[27]	B = Hod	
[28]	C = Visina	
[29]	D = Širina	
[30]	Izmerena razina zvučne snage	
[31]	Neizvjesnost	
[32]	Garantovana razina zvučne snage	
[33]	Razina zvučnog tlaka	
[34]	Neizvesnost	
[35]	Vrijednost vibracija na vozačevom mjestu	
[36]	Neizvjesnost	
[37]	Vrijednost vibracija na upravljaču	
[38]	Neizvjesnost	
[39]	DODATNI PRIBOR NA UPIT	
[40]	Opis	
[41]	Prikolica	

[42]	Uređaj za gnojenje
[43]	Uređaj za skupljanje lišća i trave
[44]	Grablje
[45]	Lanci za snijeg
[46]	Kotači za blato/snijeg
[47]	Rezno kućište
[48]	Prednja drljača
[49]	Uređaj za ustinjavanje
[50]	Turbinski čistač snijega
[51]	Prednji čistač snijega
[52]	Čistač snijega sa sječivima
[53]	Provetrivač
[54]	Protuv tegovi za zadnje kotače
[55]	Zadnji podizač dodatnog pribora
[56]	(**) Kod modela s trakcijom na 2 kotača, na zadnje kotače morate staviti protuv tegove.
[57]	TABLICA ZA PRAVILNO KOMBINIRANJE DODATNOG PRIBORA
[58]	ZADNJI DODATNI PRIBOG
[59]	PREDNJI DODATNI PRIBOG
[60]	Pribor
[61]	(***) Kod modela s trakcijom na 2 kotača, priliko istodobnre uporabe reznog kućišta "110C E, 110C E QF, 125C E QF" i prikolice na zadnje kotače morate staviti protuv tegove.

0 MŰSZAKI ADATOK TÁBLÁZATA

[1]	Típus	
[2]	Modell	
[3]	Motor	
[4]	Hengerűrtartalom	
[5]	Meghajtás	
[6]	Teljesítmény	
[7]	Fordulatszám	
[8]	Elektromos berendezés	
[9]	Akkumulátor	
[10]	Üzemanyag	
[A]	Ólommentes benzin	
[11]	Üzemanyagtartály térfogata	
[12]	Motorolaj	
[13]	Motorolaj, szervizosztály	
[A]	SJ vagy magasabb	
[14]	Motorolajtartály térfogata szűrőcsere nélkül	
[15]	Motorolajtartály térfogata szűrőcserével	
[16]	Hajtóműolaj	
[17]	Hajtóműolaj mennyisége olajcserénél	
[18]	Gyújtógyertya	
[A]	Champion XC12YC vagy egyenértékű	
[19]	Gyújtógyertya, elektródok távolsága	
[20]	Abroncsok	
[21]	Abroncsok nyomása	első
		hátsó
[22]	Vágásmagasság	
[A]	A vágásmagasságról lásd a nyíróberendezés használati utasításában a "Műszaki adatok táblázatá"-t	
[23]	Haladási sebesség (hozzávetőleges) előremenetben	
[24]	Haladási sebesség (hozzávetőleges) hátramenetben	
[25]	A gép tömege üres tartállyal	
[26]	A = hossz	
[27]	B = tengelytáv	
[28]	C = magasság	
[29]	D = szélesség	
[30]	Mért hangteljesítmény	
[31]	Pontatlanság	
[32]	Garantált hangteljesítmény	
[33]	Hangnyomás szint	
[34]	Pontatlanság	
[35]	Rezgések értéke vezetőülésnél	
[36]	Pontatlanság	
[37]	Rezgések értéke kormánykeréknél	
[38]	Pontatlanság	
[39]	RENDELHETŐ TARTOZÉKOK	
[40]	Megnevezés	

[41]	Utánfutó
[42]	Permetező
[43]	Levél- és fűgyűjtő
[44]	Lombseprű
[45]	Hólánc
[46]	Sár- és hókerekek
[47]	Nyíróberendezés
[48]	Front borona
[49]	Szárzúzó
[50]	Turbós hómaró
[51]	Front seprű
[52]	Késes hókotró
[53]	Mélyszellőztető/gyeplazító
[54]	Keréksúlyok hátsó kerekekhez
[55]	Hátsó tartozékemelő
[56]	(***) A kétkerék-meghajtású modelleknél kötelező a hátsó kerekekre a keréksúlyokat felszerelni.
[57]	TARTOZÉKOK HELYES KOMBINÁCIÓJA TÁBLÁZAT
[58]	HÁTSÓ TARTOZÉKOK
[59]	FRONT TARTOZÉKOK
[60]	Tartozék
[61]	(***) A kétkerék-meghajtású modelleknél kötelező a hátsó kerekekre a keréksúlyokat felszerelni, amikor egyszerre használja a “110C E, 110C E QF, 125C E QF típusú” nyíróberendezést és az utánfutót.

0 TECHNINIŲ DUOMENŲ LENTELĖ

[1]	Tipas	
[2]	Modelis	
[3]	Variklis	
[4]	Tūris	
[5]	Trauka	
[6]	Galia	
[7]	Variklio apsukos	
[8]	Elektros sistema	
[9]	Akumuliatorius	
[10]	Degalai	
[A]	Bešvinis benzinas	
[11]	Degalų bako talpa	
[12]	Variklio alyva	
[13]	Variklio alyva, kokybės klasė	
[A]	SJ ar aukštesnė	
[14]	Variklio alyvos talpos tūris, nekeičiant filtro	
[15]	Variklio alyvos talpos tūris, keičiant filtrą	
[16]	Transmisinė alyva	
[17]	Transmisinės alyvos kiekis keitimo metu	
[18]	Žvakė	
[A]	„Champion XC12YC“ ar panašus	
[19]	Tarpai tarp žvakės elektrodų	
[20]	Padangos	
[21]	Oro slėgis padangose	priekinėse
		galinėse
[22]	Pjūvio aukštis	
[A]	Pjūvio aukštį žr. pjovimo agregato instrukcijoje „Techninių duomenų lentelėje“.	
[23]	Važiavimo greitis (apytikris), priekine eiga	
[24]	Važiavimo greitis (apytikris), atbuline eiga	
[25]	Mašinos svoris, kai bakas tuščias	
[26]	A = Ilgis	
[27]	B = Žingsnis	
[28]	C = Aukštis	
[29]	D = Plotis	
[30]	Išmatuota garso lygio galia	
[31]	Paklaida	
[32]	Garantuota garso lygio galia	
[33]	Garso slėgio lygis	
[34]	Paklaida	
[35]	Vibracija vairuotojo vietoje	
[36]	Paklaida	
[37]	Vairo vibracija	
[38]	Paklaida	
[39]	PRIEDAI, KURIUOS GALIMA UŽSISAKYTI	
[40]	Aprašymas	
[41]	Priekaba	
[42]	Tręštuvas	

[43]	Lapų ir žolių rinktuvai
[44]	Grėblys
[45]	Sniego grandinės
[46]	Ratai purvui / sniegui
[47]	Pjovimo prietaiso agregatas
[48]	Priekinės akėčios
[49]	Smulkintuvas
[50]	Turbininis sniego valytuvas
[51]	Priekinis šlavimo prietaisas
[52]	Peilinis sniego valytuvas
[53]	Aeratorius/skarifikatorius
[54]	Galinių ratų atsvarai
[55]	Galinis priedų kėlimo prietaisas
[56]	(**) Modeliuose „2WD“ ant galinių ratų privaloma sumontuoti atsvarus.
[57]	TEISINGOS PRIEDŲ KOMBINACIJOS LENTELĖ
[58]	GALINIAI PRIEDAI
[59]	PRIEKINIAI PRIEDAI
[60]	Priedas
[61]	(***) Modeliuose „2WD“ vienu metu naudojant 110C E, 110C E QF, 125C E QF tipo pjovimo prietaisų agregatus ir priekabą, ant galinių ratų privaloma sumontuoti atsvarus.

0 TEHNISKO DATU TABULA

[1]	Tips	
[2]	Modelis	
[3]	Dzinējs	
[4]	Tilpums	
[5]	Sajūgs	
[6]	Jauda	
[7]	Dzinēja apgriezienu skaits	
[8]	Elektriskā sistēma	
[9]	Akumulators	
[10]	Degviela	
[A]	Benzīns bez svina	
[11]	Degvielas tvertnes tilpums	
[12]	Motoreļļa	
[13]	Dzinēja eļļa, pakalpojuma kategorija	
[A]	SJ vai augstāka	
[14]	Dzinēja eļļas tvertnes tilpums, nemainot filtru	
[15]	Dzinēja eļļas tvertnes tilpums, nomainot filtru	
[16]	Transmisijas eļļa	
[17]	Transmisijas eļļas daudzums tās nomaiņas brīdī	
[18]	Svece	
[A]	Champion XC12YC vai līdzvērtīgs	
[19]	Svece, elektrodu atstarpe	
[20]	Riepas	
[21]	Riepu spiediens	priekšējo
		aizmugurējo
[22]	Pļaušanas augstums	
[A]	Pļaušanas augstumam, skatiet "Tehnisko datu tabulu" rokasgrāmatā “Pļaušanas ierīces komplekts”	
[23]	Kustības ātrums (aptuvens), uz priekšu	
[24]	Kustības ātrums (aptuvens), atpakaļgaitas	
[25]	Mašīnas masa ar tukšu tvertni	
[26]	A = Garums	
[27]	B = Solis	
[28]	C = Augstums	
[29]	D = Platums	
[30]	Mērītās skaņas jaudas līmenis:	
[31]	Nenoteiktība	
[32]	Garantētās skaņas jaudas līmenis	
[33]	Skaņas spiediena līmenis	
[34]	Nenoteiktība	
[35]	Vibrāciju vērtība vadītāja sēdeklī	
[36]	Nenoteiktība	
[37]	Vibrācijas vērtība pie stūres	
[38]	Nenoteiktība	
[39]	PIEDERUMI PĒC PIEPRASĪJUMA	
[40]	Apraksts	
[41]	Piekabe	
[42]	Mēslotājs	
[43]	Lapu un zāles savācējs	
[44]	Grābeklis	
[45]	Sniega ķēdes	
[46]	Dubļu/sniega riteņi	
[47]	Pļaušanas ierīces komplekts	
[48]	Priekšējā ecēšanas ierīce	
[49]	Smalcinātājs	
[50]	Sniega tīrītājs ar turbīnu	
[51]	Priekšējā slaucīšanas mašīna	
[52]	Sniega tīrītājs ar vērstuvi	
[53]	Irdinātājs/skarifikators	
[54]	Aizmugurējo riteņu pretsvari	
[55]	Piederumu aizmugurējais pacēlājs	
[56]	(**) 2WD modeļiem obligāti jāuzstāda uz aizmugurējiem riteņiem atsvari.	
[57]	TABULA PAREIZAI PIEDERUMU KOMBINĀCIJAI	
[58]	AIZMUGURES PIEDERUMI	
[59]	PRIEKŠĒJIE PIEDERUMI	
[60]	Piederums	
[61]	(***)2WD modeļiem, vienlaicīgu piemērojot "110C E, 110C E QF, 125C E QF tipa" griešanas ierīces komplektu un piekabi, ir obligāti jāuzstāda uz aizmugurējiem riteņiem atsvari.	

0 TABEL TECHNISCHE GEGEVENS

[1]	Type	
[2]	Model	
[3]	Motor	
[4]	Cilinderinhoud	
[5]	Tractie	
[6]	Vermogen	
[7]	Motortoeren	
[8]	Elektrisch systeem	
[9]	Accu	
[10]	Brandstof	
[A]	Loodvrije benzine	
[11]	Inhoud brandstoftank	
[12]	Motorolie	
[13]	Motorolie, klasse	
[A]	SJ of hoger	
[14]	Inhoud motoroliereservoir, zonder vervanging van het filter	
[15]	Inhoud motoroliereservoir, met vervanging van het filter	
[16]	Transmissieolie	
[17]	Hoeveelheid transmissieolie op het moment van de verversing	
[18]	Bougie	
[A]	Champion XC12YC of equivalent	
[19]	Bougie, afstand elektroden	
[20]	Banden	
[21]	Bandenspanning	voor
		achter
[22]	Maaihoogte	
[A]	Zie voor de maaihoogte de “Tabel technische gegevens” van de handleiding van de “maaisysteemgroep”	
[23]	Rijsnelheid (bij benadering), vooruit	
[24]	Rijsnelheid (bij benadering), achteruit	
[25]	Massa van de machine met lege tank	
[26]	A = Lengte	
[27]	B = Wielbasis	
[28]	C = Hoogte	
[29]	D = Breedte	
[30]	Gemeten geluidsvermogenniveau	
[31]	Onzekerheid	
[32]	Gegarandeerd geluidsvermogenniveau	
[33]	Geluidsdrukniveau	
[34]	Onzekerheid	
[35]	Waarde van de trillingen op de bestuurdersplaats	
[36]	Onzekerheid	
[37]	Waarde van de trillingen aan het stuurwiel	
[38]	Onzekerheid	

[39]	OPTIONELE ACCESSOIRES
[40]	Beschrijving
[41]	Aanhanger
[42]	Mestverspreider
[43]	Bladeren- en grasopvangbak
[44]	Verticuteermachine
[45]	Sneeuwkettingen
[46]	Modderwielen/sneeuwwielen
[47]	Maaisysteemgroep
[48]	Eg aan voorzijde
[49]	Hakselaar
[50]	Roterende sneeuwruimer
[51]	Frontborstel
[52]	Sneeuwruimer met sneeuwschuif
[53]	Bodemventilator/verticuleermachine
[54]	Tegengewichten achterwielen
[55]	Hefsysteem achterzijde voor accessoires
[56]	(**) Voor de 2WD modellen is het verplicht om tegengewichten om de achterwielen te installeren.
[57]	TABEL VOOR DE JUISTE COMBINATIE VAN ACCESSOIRES
[58]	ACCESSOIRES ACHTERZIJDE
[59]	ACCESSOIRES VOORZIJDE
[60]	Accessoire
[61]	(***) Voor de 2WD modellen is het, met gelijktijdig gebruik van de maaisysteemgroep “type 110C E, 110C E QF, 125C E QF” en de aanhanger, verplicht om tegengewichten om de achterwielen te installeren.

0 TABELL - TEKNISKE DATA

[1]	Type	
[2]	Modell	
[3]	Motor	
[4]	Slagvolum	
[5]	Fremdrift	
[6]	Motoreffekt	
[7]	Motoromdreininger	
[8]	Elektrisk anlegg	
[9]	Batteri	
[10]	Drivstoff	
[A]	Blyfri bensin	
[11]	Kapasitet drivstofftank	
[12]	Motorolje	
[13]	Motorolje, serviceklasse	
[A]	SJ eller høyere	
[14]	Kapasitet motoroljebeholder, uten filterskifte	
[15]	Kapasitet motoroljetank, med skifte av filter	
[16]	Transmisjonsolje	
[17]	Mengde transmisjonsolje ved skifte	
[18]	Tennplugg	
[A]	Champion XC12YC eller tilsvarende	
[19]	Tennplugg, elektrodeavstand	
[20]	Dekk	
[21]	Dekktrykk	foran
		bak
[22]	Klippehøyde	
[A]	Sjekk klippehøyden i "Tabell over tekniske data" i håndboken for klippeaggregatet	
[23]	Fremdriftshastighet (veil.) forover	
[24]	Fremdriftshastighet (veil.) bakover	
[25]	Maskinvekt med tom tank	
[26]	A = Lengde	
[27]	B = Akselavstand	
[28]	C = Høyde	
[29]	D = Bredde	
[30]	Målt lydstyrkenivå	
[31]	Toleranse	
[32]	Garantert lydstyrkenivå	
[33]	Lydtrykknivå	
[34]	Toleranse	
[35]	Vibrasjonsverdier ved førerplassen	
[36]	Toleranse	
[37]	Vibrasjonsverdier ratt	
[38]	Toleranse	
[39]	TILLEGGSUTSTYR PÅ FORESPØRSEL	
[40]	Beskrivelse	
[41]	Tilhenger	
[42]	Gjødselspreder	

[43]	Blad- og gressoppsamler
[44]	Rive
[45]	Snøkjettinger
[46]	Gjørme-/snøhjul
[47]	Klippeaggregat
[48]	Frontmontert harve
[49]	Skjæreaggregat
[50]	Snøfreser med turbin
[51]	Frontmontert feieaggregat
[52]	Snøplog med vinge
[53]	Plenlufter/kultivator
[54]	Motvekter bakhjul
[55]	Bakmontert redskapsløfter
[56]	(**) På 2WD-modellene er det påbudt å sette motvekter på bakhjulene.
[57]	TABELL FOR KORREKT KOMBINERT BRUK AV TILBEHØR
[58]	BAKMONTERT TILBEHØR
[59]	FRONTMONTERT TILBEHØR
[60]	Tilbehør
[61]	(***) På 2WD-modellene hvor man kan bruke klippe-redskap "type 110C E, 110C E QF, 125C E QF" og tilhenger samtidig er det påbudt å sette motvekter på bakhjulene.

0 TABELA DANYCH TECHNICZNYCH

[1]	Typ	
[2]	Model	
[3]	Silnik	
[4]	Pojemność skokowa	
[5]	Napęd	
[6]	Moc	
[7]	Obroty silnika	
[8]	Instalacja elektryczna	
[9]	Akumulator	
[10]	Paliwo	
[A]	Benzyna bezołowiowa	
[11]	Pojemność zbiornika paliwa	
[12]	Olej silnikowy	
[13]	Olej silnikowy, klasa użytkowa	
[A]	SJ lub wyższy	
[14]	Pojemność miski olejowej silnika, bez wymiany filtra	
[15]	Pojemność miski olejowej silnika z wymianą filtra	
[16]	Olej przekładniowy	
[17]	Ilość oleju przekładniowego w chwili wymiany	
[18]	Świeca zapłonowa	
[A]	Champion XC12YC lub równoważny	
[19]	Świeca, odległość elektrod	
[20]	Opony	
[21]	Ciśnienie w oponach	przód
		tył
[22]	Wysokość koszenia	
[A]	Odnośnie wysokości koszenia patrz “Tabela Danych Technicznych” w instrukcji “zespołu urządzenia tnącego”.	
[23]	Prędkość jazdy (orientacyjnie) podczas ruchu do przodu	
[24]	Prędkość jazdy (orientacyjnie) podczas ruchu do tyłu	
[25]	Waga urządzenia z pustym zbiornikiem paliwa	
[26]	A = Długość	
[27]	B = Odstęp	
[28]	C = Wysokość	
[29]	D = Szerokość	
[30]	Mierzony poziom mocy akustycznej	
[31]	Margines niepewności	
[32]	Gwarantowany poziom mocy akustycznej	
[33]	Poziom ciśnienia akustycznego	
[34]	Margines niepewności	
[35]	Wartość wibracji na stanowisku kierowcy	
[36]	Margines niepewności	
[37]	Wartość wibracji przy kierownicy	
[38]	Margines niepewności	
[39]	AKCESORIA DOSTĘPNE NA ZAMÓWIENIE	
[40]	Opis	

[41]	Przyczepa
[42]	Urządzenie do nawożenia
[43]	Urządzenie do zbierania liści i trawy
[44]	Zgrabiarka
[45]	Łańcuchy śniegowe
[46]	Koła błotne / śnieżne
[47]	Zespół urządzenia tnącego
[48]	Brona przednia
[49]	Kruszarka
[50]	Odśnieżarka turbinowa
[51]	Zamiatarka przednia
[52]	Pług śnieżny z ostrzem
[53]	Aerator/ skaryfikator
[54]	Przeciwciężary tylnych kół
[55]	Tylny podnośnik dla akcesoriów
[56]	(**) W modelach 2WD obowiązkowe jest zainstalowanie przeciwciężarów na tylnych kołach.
[57]	TABELA WŁAŚCIWEGO ŁĄCZENIA AKCESORIÓW
[58]	AKCESORIA TYLNE
[59]	AKCESORIA PRZEDNIE
[60]	Akcesorium
[61]	(***) W modelach 2WD, przy jednoczesnym zastosowaniu zespołów urządzeń tnących “typ 110C E, 110C E QF, 125C E QF” i przyczepy, obowiązkowe jest zainstalowanie przeciwciężarów na tylnych kołach.

0 TÉCNICO TABELA DE DADOS

[1]	Tipo	
[2]	Modelo	
[3]	Motor	
[4]	Cilindrada	
[5]	Tração	
[6]	Potência	
[7]	Rotações do motor	
[8]	Equipamento elétrico	
[9]	Bateria	
[10]	Combustível	
[A]	Benzina sem chumbo	
[11]	Capacidade reservatório de combustível	
[12]	Óleo motor	
[13]	Óleo motor, classe de serviço	
[A]	SJ ou superior	
[14]	Capacidade do reservatório de óleo do motor, sem substituição do filtro	
[15]	Capacidade do reservatório de óleo do motor, com substituição do filtro	
[16]	Óleo Transmissão	
[17]	Quantidade de óleo da transmissão no momento da substituição	
[18]	Vela	
[A]	Champion XC12YC ou equivalente	
[19]	Vela, distância elétrodos	
[20]	Pneus	
[21]	Pressão dos pneus.	anterior
		posterior
[22]	Altura de corte	
[A]	Per l'altezza di taglio, vedere la "Tabella Dati Tecnici" del manuale "assieme del dispositivo di taglio"Para a altura de corte consultar a "Tabela de Dados Técnicos" do manual "conjunto do dispositivo de corte"	
[23]	Velocidade de progresso (indicativa), em marcha à frente	
[24]	Velocidade de progresso (indicativa), em marcha-atrás	
[25]	Massa da máquina com reservatório vazio	
[26]	A = Comprimento	
[27]	B = Passo	
[28]	C = Altura	
[29]	D = Largura	
[30]	Nível de potência sonora medido	
[31]	Incerteza	
[32]	Nível de potência sonora garantido	
[33]	Nível de pressão sonora	
[34]	Incerteza	
[35]	Valor das vibrações no posto de condução	
[36]	Incerteza	

[37]	Valor das vibrações no volante
[38]	Incerteza
[39]	ACESSÓRIOS A PEDIDO
[40]	Descrição
[41]	Reboque
[42]	Fertilizador
[43]	Recolhedor de folhas e erva
[44]	Ancinho
[45]	Correntes de neve
[46]	Rodas para lama / neve
[47]	Conjunto do dispositivo de corte
[48]	Grade frontal
[49]	Máquina de cortar
[50]	Dispositivo para remover a neve de turbina
[51]	Vassoura frontal
[52]	Dispositivo para remover a neve de lâmina
[53]	Arejador/escarificador
[54]	Contrapeso rodas posteriores
[55]	Sistema de elevação posterior para acessórios
[56]	(**) Para os modelos 2WD, é obrigatório instalar os contrapesos nas rodas posteriores.
[57]	TABELA PARA A CORRETA COMBINAÇÃO DOS ACESSÓRIOS
[58]	ACESSÓRIOS POSTERIORES
[59]	ACESSÓRIOS FRONTAIS
[60]	Acessório
[61]	(***) Nos modelos 2WD, com a aplicação simultânea de todos os dispositivos de corte "tipo 110C E, 110C E QF, 125C E QF" e de reboque é obrigatório instalar os contrapesos nas rodas posteriores.

0 ТАБЛИЦА ТЕХНИЧЕСКИХ ДАННЫХ

[1]	Тип	
[2]	Модель	
[3]	Двигатель	
[4]	Объем цилиндров	
[5]	Привод	
[6]	Мощность	
[7]	Обороты двигателя	
[8]	Электроустановка	
[9]	Аккумулятор	
[10]	Топливо	
[A]	Неэтилированный бензин.	
[11]	Емкость топливного бака	
[12]	Масло двигателя	
[13]	Масло двигателя, эксплуатационный класс	
[A]	SJ или выше	
[14]	Емкость бака для масла двигателя, без замены фильтра	
[15]	Емкость бака для масла двигателя, с заменой фильтра	
[16]	Масло коробки передач	
[17]	Количество масла коробки передач в момент замены	
[18]	Свеча зажигания	
[A]	"Champion" XC12YC или эквивалентная	
[19]	Свеча зажигания, расстояние между электродами	
[20]	Шины	
[21]	Давление в шинах	передние
		задние
[22]	Высота стрижки	
[A]	Высоту стрижки см. в “Таблице технических данных” руководства режущего узла	
[23]	Скорость хода (ориентировочная) при движении вперед	
[24]	Скорость хода (ориентировочная) при движении задним ходом	
[25]	Вес изделия без топлива	
[26]	A = Длина	
[27]	B = Межосевое расстояние	
[28]	C = Высота	
[29]	D = Ширина	
[30]	Уровень измеренной звуковой мощности	
[31]	Погрешность	
[32]	Уровень звуковой мощности гарантированный	
[33]	Уровень звукового давления	
[34]	Погрешность	
[35]	Уровень вибрации на месте водителя	
[36]	Погрешность	
[37]	Уровень вибрации на рулевом колесе	

[38]	Погрешность
[39]	ПРИНАДЛЕЖНОСТИ – НАВЕСНЫЕ ОРУДИЯ ПО ЗАКАЗУ
[40]	Описание
[41]	Прицеп
[42]	Устройство для разбрасывания удобрений
[43]	Устройство для сбора листьев и травы
[44]	Грабли
[45]	Цепи противоскольжения
[46]	Колеса для грязи / снега
[47]	Режущий узел
[48]	Фронтальный рыхлитель
[49]	Измельчитель
[50]	Турбинный снегоочиститель
[51]	Фронтальное подметально-уборочное устройство
[52]	Шнекороторный снегоочиститель
[53]	Рыхлитель/культиватор
[54]	Противовесы задних колес
[55]	Заднее устройство подъема навесных орудий
[56]	(**) В моделях 2WD следует обязательно установить на задние колеса противовесы.
[57]	ТАБЛИЦА ПРАВИЛЬНОГО СОЧЕТАНИЯ ПРИНАДЛЕЖНОСТЕЙ – НАВЕСНЫХ ОРУДИЙ
[58]	ЗАДНИЕ НАВЕСНЫЕ ОРУДИЯ
[59]	ФРОНТАЛЬНЫЕ НАВЕСНЫЕ ОРУДИЯ
[60]	Навесное орудие
[61]	(***) При одновременном использовании режущего узла типа 110C E, 110C E QF, 125C E QF и прицепа в моделях 2WD следует обязательно установить на задние колеса противовесы.

0 TABELA S TEHNIČNIMI PODATKI

[1]	Tip	
[2]	Model	
[3]	Motor	
[4]	Cilindri	
[5]	Oprijem	
[6]	Moč	
[7]	Obrati motorja	
[8]	Električni sistem	
[9]	Akumulator	
[10]	Gorivo	
[A]	Neosvinčen bencin	
[11]	Kapaciteta rezervoarja za gorivo	
[12]	Motorno olje	
[13]	Motorno olje, delovni razred	
[A]	SJ ali višje	
[14]	Kapaciteta rezervoarja motornega olja, brez zamenjave filtra	
[15]	Kapaciteta rezervoarja motornega olja, z zamenjavo filtra	
[16]	Olje v menjalniku	
[17]	Količina olja v menjalniku v trenutku menjave	
[18]	Svečka	
[A]	Champion XC12YC ali enako	
[19]	Svečka, razdalja od elektrod	
[20]	Pnevmatike	
[21]	Pritisk v pnevmatikah	sprednje
		zadnje
[22]	Višina košnje	
[A]	Za višino košnje glejte “Tabelo s tehničnimi podatki” v priročniku "Sklopa Plošče za rezanje"	
[23]	Hitrost napredovanja (indikativna) pri vožnji naprej	
[24]	Hitrost napredovanja (indikativna) pri vzvratni vožnji	
[25]	Teža stroja s praznim rezervoarjem	
[26]	A = Dolžina	
[27]	B = Korak	
[28]	C = Višina	
[29]	D = Širina	
[30]	Raven izmerjene zvočne moči	
[31]	Negotovost	
[32]	Raven zagotovljene zvočne moči	
[33]	Raven zvočnega pritiska	
[34]	Negotovost	
[35]	Raven vibracij na voznikovem sedežu	
[36]	Negotovost	
[37]	Raven tresljajev na volanu	
[38]	Negotovost	
[39]	DODATNI PRIKLJUČKI NA ZAHTEVO	
[40]	Opis	
[41]	Priklopnik	

[42]	Gnojilo
[43]	Zbiralna posoda za listje in travo
[44]	Grablje
[45]	Snežne verige
[46]	Kolesa za blato / sneg
[47]	Sklop naprave za rezanje (košnjo)
[48]	Frontalna brana
[49]	Mulčer
[50]	Turbinski snežni plug
[51]	Naprava za pometanje cest - frontalni priključek
[52]	Odmetalnik snega
[53]	Kultivator/Rahljalnik
[54]	Kontrauteži za zadnja kolesa
[55]	Naprava za dviganje dodatnih priključkov - zadaj
[56]	(**) Pri modelih 2WD je potrebno namestiti kontrauteži na zadnja kolesa.
[57]	TABELA ZA PRAVILNO KOMBINACIJO DODATNIH PRIKLJUČKOV
[58]	ZADNJI PRIKLJUČKI
[59]	SPREDNJI PRIKLJUČKI
[60]	Dodatni priključek
[61]	(***) Pri modelih 2WD je potrebno pri hkratni namestitvi naprav za rezanje “tip 110C E, 110C E QF, 125C E QF” in priklopnika namestiti kontrauteži na zadnja kolesa.

0 TABELL MED TEKNISKA DATA

[1]	Typ	
[2]	Modell	
[3]	Motor	
[4]	Cylindervolym	
[5]	Dragkraft	
[6]	Effekt	
[7]	Motorvarvtal	
[8]	Elsystem	
[9]	Batteri	
[10]	Bränsle	
[A]	Blyfri bensin	
[11]	Volym bränsletank	
[12]	Motorolja	
[13]	Motorolja, serviceklass	
[A]	SJ eller högre	
[14]	Volym motoroljetank, utan filterbyte	
[15]	Volym motoroljetank, med filterbyte	
[16]	Transmissionsolja	
[17]	Mängd transmissionsolja vid byte	
[18]	Tändstift	
[A]	Champion XC12YC eller motsvarande	
[19]	Tändstift, avstånd mellan elektroderna	
[20]	Däck	
[21]	Däcktryck	fram
		bak
[22]	Klipphöjd	
[A]	För klipphöjd, se tabellen med tekniska data i klippaggregatets manual.	
[23]	Hastighet (indikativ) vid körning framåt	
[24]	Hastighet (indikativ) vid backning	
[25]	Maskinvikt med tom tank	
[26]	A = Längd	
[27]	B = Hjulbas	
[28]	C = Höjd	
[29]	D = Bredd	
[30]	Mätt ljudeffektnivå	
[31]	Osäkerhet	
[32]	Garanterad ljudeffektnivå	
[33]	Ljudtrycksnivå	
[34]	Osäkerhet	
[35]	Vibrationer på förarplatsen	
[36]	Osäkerhet	
[37]	Rattvibrationer	
[38]	Osäkerhet	
[39]	TILLVALSTILLBEHÖR	
[40]	Beskrivning	
[41]	Släp	
[42]	Gödselspridare	

[43]	Blad- och gräsuppsamlare
[44]	Kratta
[45]	Snökedjor
[46]	Hjul för lera/snö
[47]	Klippaggregat
[48]	Främre jordfräs
[49]	Kompostkvarn
[50]	Snöslunga med turbin
[51]	Främre borste
[52]	Snöröjare med blad
[53]	Luftare/vertikalskärare
[54]	Motvikter för bakhjul
[55]	Bakre tillbehörslyft
[56]	(**) För modell 2WD är det obligatoriskt att installera motvikter på bakhjulen.
[57]	TABELL ÖVER KORREKT KOMBINATION AV TILLBEHÖR
[58]	BAKRE TILLBEHÖR
[59]	FRÄMRE TILLBEHÖR
[60]	Tillbehör
[61]	(***) För modellerna 2WD, med samtidig användning av skärutrustning “typ 110C E, 110C E QF, 125C E QF” och av bogseringsutrustning är det obligatoriskt att installera motvikter på bakhjulen.

1 INTRODUCTION . . . 4
1.1 STRUCTURE OF THE MANUAL . . . 4
1.2 SYMBOLS . . . 4
1.3 MANUAL STORAGE . . . 4

2 GETTING TO KNOW THE MACHINE . . . 4
2.1 MODELS [2WD] . . . 4
2.2 MODELS [4WD] . . . 4
2.3 INTENDED USE . . . 5
2.3.1 User type definition . . . 5
2.4 IMPROPER USE . . . 5
2.5 SAFETY SIGNS. . . . 5
2.5.1 Stickers (4) . . . 5
2.6 PRODUCT IDENTIFICATION LABEL . . . 6
2.7 MAIN COMPONENTS . . . 6

3 SAFETY REGULATIONS . . . 6
3.1 TRAINING . . . 6
3.2 PRELIMINARY PROCEDURES . . . 7
3.3 DURING USE . . . 8
3.4 MAINTENANCE AND STORAGE . . . 10
3.5 TRANSPORT. . . . 11
3.6 ENVIRONMENTAL PROTECTION . . . 11

4 INSURE THE LAWNMOWER . . . 11

5 ASSEMBLY . . . 11
5.1 ASSEMBLY COMPONENTS (3) . . . 11
5.2 ENGINE BONNET (5:A) . . . 11
5.3 BATTERY . . . 12
5.3.1 Battery connection (6) . . . 12
5.3.2 Battery power reserve . . . 12
5.4 SEAT (7) . . . 12
5.5 STEERING WHEEL (8) . . . 12
5.6 TOW BAR (9) . . . 12
5.7 QUICK RELEASE SUPPORTS (1:N). . . . 12
5.8 TYRE PRESSURE . . . 13
5.9 ATTACHMENTS . . . 13

6 CONTROLS . . . 13
6.1 MECHANICAL ATTACHMENT LIFT PEDAL (10:C) . . . 13
6.2 PARKING BRAKE PEDAL (10:B) . . . 13
6.3 PARKING BRAKE LOCK LEVER (10:A) . . . 13
6.4 DRIVE PEDAL (10:F) . . . 13
6.5 STEERING WHEEL (10:D) . . . 13
6.6 ACCELERATOR (11:A; 12:A) MOD.: [B&S Vanguard] [ST.] . . . 13
6.7 THROTTLE (IF APPLICABLE) (12:B) mod. [ST.] . . . 14

6.8 IGNITION BLOCK (11:C, 12:C) . . . 14
6.9 POWER SOCKET (11:D; 12:D) . . . 14
6.10 CUTTING HEIGHT ADJUSTMENT (11:E; 12:E) . . . 14
6.11 HEADLIGHT SWITCH (11:F; 12:F) . . . 14
6.12 BLUETOOTH (IF APPLICABLE). . . . 14
6.13 ATTACHMENT COMPARTMENT (11:G; 12:G) . . . 14
6.14 GEAR ON/OFF LEVER (14; 15) . . . 14
6.15 SEAT ADJUSTMENT (16:B) . . . 15
6.16 ENGINE BONNET . . . 15
6.17 QUICK RELEASE SUPPORTS . . . 15

7 STARTING AND DRIVING . . . 16
7.1 PRECAUTIONS FOR USE . . . 16
7.2 COMBINED ATTACHMENT USE . . . 16
7.3 REFUELLING . . . 16
7.4 CHECKING THE ENGINE OIL LEVEL (21; 22) . . . 16
7.5 CHECKING THE TRANSMISSION OIL LEVEL . . . 16
7.6 SAFETY CHECKS . . . 16
7.6.1 General safety check . . . 17
7.6.2 Electrical safety check . . . 17
7.7 START-UP/WORKING . . . 17
7.7.1 Run . . . 17
7.8 STOP . . . 17
7.9 CLEANING. . . . 18

8 ATTACHMENT USE. . . . 18
8.1 CUTTING HEIGHT . . . 18
8.2 MOWING TIPS . . . 18

9 MAINTENANCE . . . 18
9.1 SERVICE PROGRAM . . . 18
9.2 PREPARATION . . . 18
9.3 MAINTENANCE TABLE . . . 18
9.4 TYRE PRESSURE . . . 19
9.5 ENGINE OIL TOP UP/CHANGE. . . . 19
9.5.1 Check/top-up (21; 22; 23). . . . 19
9.5.2 Change/filling (21; 22; 23) . . . 19
9.5.3 Oil filter replacement (if applicable) . . . 20
9.6 FUEL FILTER REPLACEMENT (21:C, 22:C, 23:E) . . . 20
9.7 TRANSMISSION OIL CHECK/TOP-UP [4WD] . . . 20
9.7.1 Check/top-up (26) . . . 20
9.7.2 Change . . . 20
9.8 BELT TRANSMISSION CHECK . . . 21
9.9 STEERING . . . 21
9.9.1 Checks . . . 21
9.9.2 Adjustment (32) . . . 21

9.10 BATTERY 21
9.10.1 Charging by the engine 21
9.10.2 Charging by a battery charger 22
9.10.3 Disassembly/assembly 22
9.10.4 Cleaning 22
9.11 AIR FILTER, ENGINE 22
9.11.1 Cleaning/Replacement 22
9.11.2 Replace the spark plug 23
9.11.3 Air vent cleaning 23
9.12 LUBRICATION (31) 23
9.13 FUSES (35) 23

10 ASSISTANCE AND REPAIRS 24

11 STORING 24

12 PURCHASE CONDITIONS 24

13 SUMMARY MAINTENANCE TABLE 25

14 TROUBLESHOOTING 25

1 INTRODUCTION

Read the instruction manual carefully before starting the engine.

1.1 STRUCTURE OF THE MANUAL

The manual consists of the cover, an index, a section including all the illustrations, the explanatory text.
The content is divided into chapters, paragraphs and sub-paragraphs.
This manual contains some tables relating to the various engines (if any).
To facilitate reading, highlight the data that refer to the relevant machine or engine.

Figures

The figures in these instructions for use are numbered 1, 2, 3, etc.

The components indicated in the figures are identified with letters A, B, C, and so on.

A referent to the illustration is indicated with the wording (2).

A reference to component A in figure 2 is indicated with the wording (2:A).

Headings

The headings in these instructions for use are numbered as indicated in the following example:

2.3 INTENDED USE" is a subtitle of "GETTING TO KNOW THE MACHINE" and is included under this heading.

When referring to headings, usually only relative numbers are specified, for example "See 2.3.1".

1.2 SYMBOLS

WARNING symbol. Failure to follow the instructions provided may result in serious injury to persons and/or damage to property.

OBLIGATION symbol. Indicates an obligatory action to be performed.

PROHIBITION symbol. Indicates a prohibited operation.

NOTE symbol. Indicates information or in-depth analysis of particular importance.

REFERRAL symbol. Indicates a reference to information, the note indicates where the information is.

1.3 MANUAL STORAGE

Keep the manual in good condition and legible, in a place known and easily accessible to the machine user.

2 GETTING TO KNOW THE MACHINE

This machine is a garden tool and precisely a front cutting ride-on lawnmower with seated operator.

The machine is equipped with an engine which drives the cutting device assembly protected by a casing, as well as a transmission unit that moves the machine.

The machine is articulated. This means that the chassis is divided into a front and a rear section which can be steered in relation to each other.

Articulated steering allows the machine to turn around trees and other obstacles with an extremely small turning radius.

The operator is able to operate the machine and use the main controls, always seated in the operator's position.

The safety devices installed on the machine will disengage the engine and cutting device assembly.

2.1 MODELS [2WD]

This machine is fitted with rear traction.

The rear axle is equipped with hydrostatic drive with infinite forward and reverse gears.

The rear axle is also equipped with a differential to facilitate steering.

Front mounted accessories are driven by drive belts.

2.2 MODELS [4WD]

The machine has 4 wheel drive.

Power from the engine to the drive wheels is transmitted hydraulically.

The engine drives an oil pump which drives the rear and front axles (wheels) through a hydraulic circuit.

The front and rear wheels rotate at the same speed.

To facilitate steering, both axles are equipped with differentials.

Front mounted accessories are driven by drive belts.

2.3 INTENDED USE

This machine was designed and built to cut grass.

The use of special attachments provided for by the Manufacturer as original equipment or which may be purchased separately, allows this work to be done in various operating modes, illustrated in this manual or the instructions that accompany the single attachments.

Likewise, the intended use can be amplified to include other functions by applying supplementary tools (if provided for by the Manufacturer), abiding by the restrictions and conditions indicated in the instructions accompanying the equipment.

The machine must be used by one operator.

The stability of the machine is reduced if a front attachment other than the cutting device assembly is used.

The machine must be used with at least the cutting assembly or other front attachment mounted.

2.3.1 User type definition

This machine is intended for use by consumers, i.e. non-professional operators.

The machine is intended for "DIY" use only.

2.4 IMPROPER USE

Any other usage not in keeping with the above-mentioned ones may be hazardous and harm persons and/or damage things.

Examples of improper use may include, but are not limited to:

- transporting people, children or animals on the machine or on a trailer;
- towing or pushing loads without the use of the specified attachment for towing;
- use of the machine for riding over unstable, slippery, icy, stony, rough, marshy ground or puddles that do not allow the consistency of the ground to be assessed;
- using the cutting means on surfaces other than grass.

Improper use of the machine will invalidate the warranty, relieve the Manufacturer from all liabilities, and the user will consequently be liable for all and any damage or injury to himself or others.

2.5 SAFETY SIGNS

The safety signs on the machine inform the user about the behaviour to be followed when using the machine, especially in operations that require caution and attention.

WARNING. Indicates a hazard. It is normally combined with other signs that indicate the particularity of the hazard.

Warning! Read the instruction manual carefully before using the machine.

Warning! Beware of any objects left lying around. Beware of any persons in the work area.

Warning! Always wear protective earplugs.

Warning! The machine has not been approved for use on public roads.

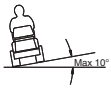

Warning! This machine, with original accessories installed, can proceed with a maximum inclination of 10°, regardless of the direction.

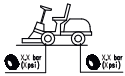

Tyre pressure. The label shows the optimal tyre pressure values - see chap. "0 TECHNICAL SPECIFICATIONS TABLE". Correct tyre pressure is an essential condition for obtaining good results from using the machine.

2.5.1 Stickers (4)

Parking brake lock indication.

Gear engagement/release indication (4:A).

The sticker is located:

- near the gear engagement/release lever.

Indication of the maximum towable weight (4: B).

The sticker is located:

- near the tow bar.

Warning! Burns hazard (4:C). Do not touch the muffler.

The sticker is located:
near the muffler;

Warning! Crushing hazard (4:D). Keep hands and feet away from the articulated steering joint and the tow hitch when an accessory is attached.

The sticker is located:
- near the articulated steering joint;
- near the tow bar.

Any damaged or illegible decals must be replaced.

Order replacement decals from an authorised service centre.

2.6 PRODUCT IDENTIFICATION LABEL

The identification label holds the following data (see fig. 1):
1. Manufacturer's address
2. Type of machine
3. Acoustic power level
4. Conformity marking
5. Machine mass with empty tank in kg
6. Operating engine power and speed
7. Year of manufacture
8. Serial number
9. Article code

Write the serial number of your machine in the space provided in the figure (1:10).

The product is identified thanks to two components:
- The item and serial numbers of the machine.
- The serial numbers, type and model of the engine.

Quote the identification names whenever you contact an authorised service workshop.

The example of the Declaration of Conformity is provided on the penultimate page of the manual.

2.7 MAIN COMPONENTS

The machine consists of the following main components (see fig. 1):
A. Chassis
B. Wheels
C. Steering wheel
D. Seat
E. Console
F. Foot controls
G. Engine bonnet
H. Front attachment lift lever
I. Fuse box
J. Battery
K. Fuel tank
L. Transmission oil tank
M. Engine
N. Quick release supports for attachments

3 SAFETY REGULATIONS

Read these instructions carefully before operating the machine.

3.1 TRAINING

WARNING! Read these instructions carefully before operating the machine.
Become acquainted with the controls and the proper use of the machine.
Learn to stop the machine and disengage the controls quickly.
Failure to follow the warnings and instructions may result in electric shock, fire and/or serious injury.
Save all warnings and instructions for future reference.

Never allow children or persons unfamiliar with these instructions to use the machine.
Local regulations may restrict the age of the operator.

Never mow while people, especially children, or pets are nearby.

Never use the machine if the user is tired or unwell, or has taken medicine, drugs, alcohol or any substances which may slow his reflexes and compromise his judgement.

Bear in mind that the operator or user is responsible for accidents or unexpected events occurring to other people or their property.
It is the user's responsibility to assess the potential risk of the area where work is to be carried out, and to take all the necessary precautions to ensure

his own safety and that of others, particularly on slopes or rough, slippery and unstable ground.

If the machine is sold or lent to others, make sure that the operator reads the user instructions contained in this manual.

Do not allow children or other passengers to ride on the machine as they could fall off and injure themselves or compromise safe driving by the operator.

The machine operator must follow the driving instructions carefully and, in particular:

a. Avoid distractions and maintain concentration whilst working;

b. Bear in mind that control of a machine sliding on a slope will not be regained by the application of the brake. The main reasons for loss of control are:
- Insufficient wheel grip;
- Excessive speed;
- Inadequate braking;
- Type of machine unsuitable for its task;
- Lack of awareness of the effect of ground conditions, especially slopes;
- Incorrect use as a towing machine;

The machine is supplied with a series of micro-switches and safety devices which must never be tampered with or removed; this will invalidate the warranty and relieve the manufacturer from all responsibility. Always check that the safety devices are working properly before using the machine.

3.2 PRELIMINARY PROCEDURES

- While using the machine, always wear anti-slip and resistant work footwear and long pants.
- Do not operate the machine when barefoot or wearing open sandals.
- Avoid wearing chains, bracelets, clothing that is loose fitting or has hanging cords or ties.
- Tie hair back if it is long. Always wear protective earplugs.
- Thoroughly inspect the entire work area and remove anything that could be thrown by the machine or damage the cutting unit or motor (stones, branches, iron wire, bones, etc.).

WARNING: DANGER! The fuel is highly flammable.

a. Store the fuel in special containers;

b. add fuel, using a funnel, only outdoors; do not smoke during this operation and each time fuel is handled;

c. Top-up with fuel before igniting the engine; never remove the tank cap or add fuel while the engine is running or when it is hot;

d. if you have spilled some fuel, do not attempt to start the engine but move the machine away from the area of spillage and avoid creating any source of ignition until the fuel has evaporated and fuel vapours have dissipated.

e. Replace caps of all fuel tanks and containers securely.

Replace faulty mufflers.

Before use, always inspect the machine in general and in particular the cutting device and check whether the screws and cutting devices are worn or damaged.
Replace the entire cutting means and all damaged or worn screws to preserve balance.
Any repairs must be done at a specialised centre.

Check the battery status regularly. Replace it if there is any damage to the casing, cover or terminals.

3.3 DURING USE

Do not operate the engine in a confined space where dangerous carbon monoxide fumes can develop.
All starting operations have to be effected in an open or well ventilated area.
Always remember that exhaust gases are toxic.

Work only in daylight or with good artificial light in good visibility conditions. Keep persons, children and animals away from the working area.

If possible, avoid mowing wet grass. Avoid working in the rain and when there is a risk of a thunderstorm risk. Do not use the machine in bad weather conditions, especially when there is risk of lightening.

Before igniting the engine, disengage the cutting device or the power socket and put the transmission in neutral.

Pay special attention when approaching obstacles that could compromise visibility.

Engage the parking brake when parking the machine.

The machine must not be used on slopes of over 10° (17%), regardless of the mowing direction.

Remember there is no such thing as a "safe" slope. Driving on grass slopes requires particular care. To prevent overturning or loss of control over the machine:

- **a.** Do not stop or start suddenly when going up or downhill;
- **b.** Engage the drive slowly and always keep the machine in transmission, especially when travelling downhill;
- **c.** Machine speeds should be kept low on slopes and during tight turns;
- **d.** Watch out for humps, hollows and other hidden hazards;
- **e.** Never mow across the face of the slope. Lawns on a slope have to be mowed moving up and down and never across them. When changing direction, take great care that the wheels facing the slope do not hit any obstacles (such as stones, branches, roots, etc.) that may cause the machine to slide sideways, tip over or make you lose control.

Reduce speed before any change of direction on slopes, and always apply the parking brake before leaving the machine at a standstill and unattended.

Be very careful near ravines, ditches or embankments. The machine could overturn if a wheel slides over the edge or if the earth gives way.

Pay maximum attention when working in reverse gear. Look behind you to make sure there are no obstacles before and during operations in reverse gear.

Use care when towing loads or using heavy equipment:

- **a.** Use approved drawbar hitch points only when towing;
- **b.** Limit loads to those you can safely control;
- **c.** Do not turn sharply. Take care when reversing;
- **d.** Use counterweight(s) or wheel weights whenever advised in the instructions manual.

Disengage the cutting device or the power socket when crossing areas with no grass, when moving to or from areas that require mowing, and move the cutting device assembly to its highest position.

Look out for traffic when using the machine near the road.

WARNING! The machine has not been approved for use on public roads. It must be used (as indicated by the highway code) in private areas closed to traffic.

Never use the machine if the guards are damaged,

Never place your hands and feet near or under rotating parts. Keep away from the discharge opening.

Do not leave the machine stopped on high grass with the engine running to avoid the risk of starting a fire.

When using the attachments, never direct the opening towards people.

Use manufacturer-recommended attachments only.

Don't use the machine if the attachments/tools are not installed in their seats. Driving without attachments could jeopardise machine stability.

Pay attention when using the grass catcher and attachments that can alter the stability of the machine, especially on slopes.

Do not change the engine settings or over-rev the engine.

Do not touch the engine parts as they get very hot when running. Burn hazard.

Disengage the cutting device or power socket, put in neutral and engage the parking brake, turn off the engine and remove the ignition key (checking that all moving parts are completely stationary):

a. Whenever the machine is left unattended or the operator dismounts from the driving seat:
b. Before clearing blockages or unclogging the discharge chute;
c. Before checking, cleaning or working on the machine;
d. After striking a foreign object. Inspect the machine for damage and make repairs before using it again;

Disengage the cutting device or the power socket and switch off the engine (making sure that all moving parts are stationary):

a. Before refuelling;
b. Whenever you remove or reattach the grass catcher;
c. Before adjusting the cutting height, if this operation can not be performed from the driving seat.

Disengage the cutting device or the power socket during transport and whenever it is not in use.

Reduce the throttle setting before stopping the engine. Shut off the fuel supply on completing the work, following the instructions in the engine manual.

Pay attention to cutting assemblies with more than one cutting device, as a rotating cutting device can trigger the rotation of the others.

WARNING – If something breaks or an accident occurs whilst working, turn off the engine immediately and move the machine away to prevent further damage; if an accident occurs with injuries or third parties are injured, carry out the first aid measures most suitable for the situation immediately and contact the medical authorities for any necessary health care. Carefully remove any debris which could cause damage or injury to persons or animals if ignored.

WARNING! The noise and vibration levels shown in these instructions are the maximum levels for use of the machine. The use of an unbalanced cutting element, the excessive speed of movement, or the absence of maintenance have a significant influence on noise emissions and vibrations. Consequently, it is necessary to take preventive steps to eliminate possible damage due to high levels of noise and stress from vibration. Maintain the machine well, wear ear protection devices, and take breaks while working.

3.4 MAINTENANCE AND STORAGE

WARNING! – Before cleaning or doing maintenance work, take out the ignition key and read the relevant instructions. Wear proper clothing and protective gloves whenever your hands are at risk.

WARNING! – Never use the machine with worn or damaged parts. Faulty or worn-out parts must always be replaced and never repaired. Use original replacement parts only: the use of non-original and/or incorrectly fitted parts will jeopardize the safety of the machine, may cause accidents or personal injuries for which the Manufacturer is under no circumstance liable or responsible.

Any adjustments or maintenance operations not described in this manual must be carried out by your Dealer or a specialized Service Centre with the necessary knowledge and equipment to ensure that the work is done correctly maintaining the machine's original safety level. Any operations performed

in unauthorized centres or by unqualified persons will totally invalidate the Warranty and all obligations and responsibilities of the Manufacturer.

- After each use, remove the ignition key and check for damage.
- Keep all nuts, bolts and screws tight to be sure the equipment is in safe working condition. Routine maintenance is essential for safety and for maintaining a high performance level.
- Check that the cutting device screws are properly tightened on a regular basis.

Wear work gloves when handling, disassembling and reassembling the cutting device.

Keep the cutting means well balanced during sharpening. All work on the cutting means (disassembly, sharpening, balancing, reassembly and/or replacing) are demanding jobs that require special skills as well as special tools. For safety reasons, these jobs are best carried out at a specialised centre.

- Check that the brakes work properly on a regular basis. It is vital for brakes to undergo regular maintenance and, where necessary, repair work.
- Replace any instruction or warning message stickers, if damaged.
- If the machine does not have mechanical transport stops, the attachments must always be placed on the ground when the machine is parked, stored or left unattended.
- Store the machine out of the reach of children.

Do not store the machine with fuel in the tank in an area where fuel vapours could reach a flame, a spark or a strong heat source.

- Allow the engine to cool before storing in an enclosed space.
- To reduce fire hazards, keep the engine, muffler, battery compartment and petrol storage area free of grass, leaves, or excessive grease.
- To reduce the risk of fire, regularly check the machine for oil and/or fuel leaks.
- If the fuel tank has to be emptied, this should be done outdoors once the engine has cooled down.
- Never leave the keys in the ignition or within reach of children or unauthorised persons. Always remove the ignition key before doing any maintenance.

WARNING! - The acid contained in the battery is corrosive. It could leak in case of mechanical damage or overcharging. Avoid inhalation and contact with any part of the body.

Inhaling acid vapours causes damage to mucous membranes and internal organs. Seek medical attention immediately.

WARNING! - Do not over-charge the battery. Excessive charging can cause it to explode causing the acid to leak.

WARNING! - Acid causes severe damage to tools, clothing and other materials. Immediately rinse the affected area with water.

Never short-circuit the battery terminals. The resulting sparks could cause a fire.

PAY ATTENTION to hydraulic components. Escaping hydraulic fluid under pressure can penetrate and severely damage the skin, requiring immediate medical attention.

3.5 TRANSPORT

WARNING! - If the machine must be transported on a truck or trailer, use ramps with suitable resistance, width and length.

During transport, close the fuel stopcock (if fitted), lower the cutting device assembly or attachment, engage the parking brake and fasten the machine securely with ropes or chains to the hauling device.

3.6 ENVIRONMENTAL PROTECTION

- Safeguarding the environment must be a relevant and priority aspect of machine use, of benefit to the community and the environment

we live in. Avoid being a disturbance to the neighbourhood.

- Adhere strictly to the local regulations governing the disposal of packaging, oil, fuel, filters, damaged parts or any other element which may have an impact on the environment; this waste should not be disposed of along with standard household waste, but must be disposed of separately and sent to special waste disposal facilities for handling and recycling.
- Scrupulously comply with local regulations for the disposal of waste materials after mowing.
- When the machine is withdrawn from service, do not dispose of it in the environment, but take it to a waste disposal facility in accordance with the local regulations in force.

4 INSURE THE LAWNMOWER

Check the insurance of the ride-on mower.

Contact your insurance company.

You must take out a policy that includes traffic, fire, damage and theft.

5 ASSEMBLY

Before first use, fully charge the battery.

Do not use the machine until all the indications provided in the “ASSEMBLY” section have been carried out.

Unpacking and completing the assembly should be done on a flat and stable surface, with enough space for moving the machine and its packaging, always making use of suitable equipment.

5.1 ASSEMBLY COMPONENTS (3)

The machine is delivered with the seat, the armrests, the steering wheel, the tow bar, the quick release supports removed and the battery placed in its seat but disconnected.

The packaging includes the assembly components (3) listed in the table below:

Pos.	N.	Description	Dimensions
A	2	Pin	6 x 36
B	1	Shim washer	6x38x0.5
C	1	Shim washer	16x38x1.0
D	2	Ignition key	/
E	2	Battery nut	/
F	2	Battery screws	/
G	2	Nut	M8
H	1	Tow bar	/
J	2	Screw	8x20
R	4	Grower washer	14 x 8.2 x 2

5.2 ENGINE BONNET (5:A)

To access the fuel cock, battery and engine, open the engine bonnet.

The engine bonnet opens as follows:

1. Grasp and lift the engine bonnet (5:A).

It is forbidden to start the engine when the bonnet is open.

5.3 BATTERY

For the type of battery used on the machine see "0 TECHNICAL SPECIFICATIONS TABLE"

WARNING! The acid contained inside the battery is corrosive and its contact is harmful.

Handle the battery carefully taking care not to let it leak out.

Do not check and/or top up the battery fluid

5.3.1 Battery connection (6)

Connect the battery to the machine electrical system using the screws and nuts (6:F; 6:E)

1. Connect the red cable to the positive battery terminal (+).
2. Connect the black cable to the negative battery terminal (-).

The battery may short or be damaged if the cables are disconnected/connected in the reverse order.

The alternator and battery will be damaged if the cables are interchanged.

Securely tighten the cables. Loose cables can cause fire.

Never run the engine if the battery is not connected. The alternator and electrical system could be seriously damaged.

5.3.2 Battery power reserve

Before first use, fully charge the battery.

For battery charging procedures see 9.10.

5.4 SEAT (7)

1. Disassemble the following components from the seat support:
   - 4 Nuts (for locking during transport, will not be used further).
   - 4 Screws (7:K).
   - 4 Washers with shoulders (7:L).
   - 4 Grower washers (7:R).
2. Place the seat on its rest in the seat support.
3. Fit the shoulder washers (7:L) to the screws (7:K), complete with washers (7:R).
4. Insert the screws complete with shoulder washers into the seat support slots and seat plate holes. Screw the seat into position.

Tightening torque 9±1.7 Nm.

The seat will be damaged if the screws are tightened to a torque greater than 9 ± 1.7 Nm.

5. Check that the seat slides easily in the bracket slots.

The seat is reclinable. If the car is left outside in the rain, fold the seat forward to prevent the cushion from getting wet.

5.5 STEERING WHEEL (8)

To minimise the axial play of the steering column, fit the 0.5 mm and/or 1 mm shim washers (3:C; 3:B) on the steering column between the sleeves pos. (8:A) as follows.

1. Fit the sleeve (8:B) on the steering column and secure it by inserting one of the pins (8:C) about 1/3 of its length.
2. Pull the sleeve and the steering column upwards.
3. Check that the 0.5 mm washer, the 1 mm washer or both can be inserted into the opening created at point (8:A). The washer(s) must not be forced, as there must be a slight axial play.
4. Extract the pin (8:C) with the pin punch (8:D) and remove the sleeve.
5. Fit the washer(s) as determined in step 3 above.
6. Fit the sleeve onto the steering column and secure by fully inserting the pins. Lock the steering column.

5.6 TOW BAR (9)

Fit the tow bar (9:B) to the rear of the machine.

Use the screws and nuts (9:A; 9:C).

Tightening torque 22 Nm.

5.7 QUICK RELEASE SUPPORTS (1:N)

The quick release supports and related installation instructions are supplied in a separate package located in the machine's packaging.

Install the quick release supports on the front machine semi-axles.

5.8 TYRE PRESSURE

For tyre pressure see chap. "0 TECHNICAL SPECIFICATION TABLE"

5.9 ATTACHMENTS

To mount attachments, see the separate assembly guide supplied with each attachment.

N.B. In this case the cutting device assembly is considered an attachment.

6 CONTROLS

6.1 MECHANICAL ATTACHMENT LIFT PEDAL (10:C)

It controls the lever (10:C1) used to bring the attachments from the working position to the transport position.

- Transport position: fully press the pedal down and remove your foot, the pedal remains down.
- Working position: slowly press and release the pedal.

Do not switch to the transport position while the attachment is running. This would destroy the drive belt.

6.2 PARKING BRAKE PEDAL (10:B)

Never press the pedal while driving.

There is a risk of overheating the transmis-

sion.

The pedal (10: B) can assume the following positions:

Released. Drive on. The parking brake is not activated.

Half-pressed. Forward drive is disengaged. The parking brake is not activated.

Fully pressed. Drive is disengaged. The parking brake is fully activated but not locked. This position is also used as an emergency brake.

6.3 PARKING BRAKE LOCK LEVER (10:A)

Locks the “brake” pedal in the fully pressed position. This function is used to lock the machine on slopes, during transport, etc., when the engine is stopped.

Lock:

1. Fully press the pedal down (10:B).
2. Move the latch (10:A) to the right.
3. Release the pedal (10:B);
4. Release the latch (10:A)

Unlock:

1. Press and release the pedal (10:B).

6.4 DRIVE PEDAL (10:F)

The pedal determines the gear ratio between the engine and the drive wheels (= speed).

When the pedal is released, the service brake is activated.

- Pushing the pedal forward, - the machine moves forward.

- When there is no load on the pedal - the machine is stationary.

- Pushing the pedal back - the machine moves in reverse.

- By reducing the pressure on the pedal - the machine brakes.

There is a plate on the top section of the pedal which can be adjusted to suit the driver's foot.

If the machine does not brake as expected when the pedal is released, use the left pedal (10: B) as an emergency brake.

6.5 STEERING WHEEL (10:D)

The height of the steering wheel is infinitesimal adjustable.

Unscrew the steering adjustment knob (10:E) to raise or lower the steering wheel to the desired position. Tighten.

Do not adjust the steering wheel while driving.

Never turn the steering wheel when the machine is stationary with an attachment lowered. There is a risk of abnormal loads on the power steering and steering components.

6.6 ACCELERATOR (11:A; 12:A) MOD.: [B&S Vanguard] [ST.]

Used to adjust engine speed.

Full gas - to be used always when using the machine.

Minimum.

6.7 THROTTLE (IF APPLICABLE) (12:B) mod. [ST.]

Control to close the throttle in case of cold starts.

Control fully out (12:B1) - throttle closed. For cold starts.
Control fully in (12:B2) - throttle open. For hot starts and while driving.

When the engine is hot, do not proceed with the throttle closed.

Some models are equipped with a system that automatically controls the position of the choke in the carburettor during engine start-up and warming-up.

6.8 IGNITION BLOCK (11:C, 12:C)

The ignition block is used to start and stop the engine.

When leaving the driver's seat, do not leave the key in position 2 or 3. There is a risk of fire - fuel can enter the engine through the carburettor - and the battery will deplete and be damaged.

The four key positions:

1. Stop position - the motor is short-circuited. The key can be removed.

2. On position

3. On position

4. Ignition position - turning the key to this position activates the starter motor. When the engine is running, release the key, which returns to the on position.

6.9 POWER SOCKET (11:D; 12:D)

The power socket must never be engaged when the front attachment lift is in the transport position. This will destroy the belt transmission.

Power socket on/off button (11:D, 12:D). Press the button to switch the power socket on/off.

6.10 CUTTING HEIGHT ADJUSTMENT (11:E; 12:E)

The machine is equipped with a control for using the cutting device with electric cutting height regulator.

The switch allows for continuous cutting height adjustment.

The cutting device assembly is connected to the socket (13:B).

6.11 HEADLIGHT SWITCH (11:F; 12:F)

Headlight on/off switch (11:F, 12:F). Press the switch to turn headlights on/off.

6.12 BLUETOOTH (IF APPLICABLE)

Some models are equipped with a Bluetooth function, which allows direct wireless connection between the machine and a device over a short distance.

The device must have the appropriate App for data exchange installed, whose instructions for use are provided separately.

Bluetooth is activated when the machine is turned on and deactivated when the machine is turned off.

Check that the connection to the device/App is active.

6.13 ATTACHMENT COMPARTMENT (11:G; 12:G)

Compartment used to store attachments.

6.14 GEAR ON/OFF LEVER (14; 15)

Lever that excludes variable gears.

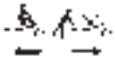

The 2WD is equipped with a lever connected to the rear axle. See (14:A).

4WD has two levers connected to the rear axle (15:A) and to the front axle (15:B).

The on/off lever must never be between the external and internal position. This condition overheats and damages the transmission.

The levers allow you to move the machine manually (by pushing or pulling), without starting the engine.

The two positions are:

Drive on (14:A1; 15:A1-B1) - transmission engaged for normal use.

Drive off (14:A2; 15:A2-B2) - transmission off. The machine can be moved by hand.

Avoid towing the machine over long distances or at high speeds. The transmission could be damaged.

Do not operate the machine with the drive off (lever in). There is a risk of damage and oil leakage in the front axle.

6.15 SEAT ADJUSTMENT (16:B)

The seat can be adjusted forwards and backwards as follows:

1. Move the control lever (16:A) up.
2. Move the seat to the desired position.
3. Release the control lever (16:A) to lock the seat.

The seat is equipped with a safety switch connected to the safety system of the machine.

This means that when there is no one in the seat, the machine cannot be started. (see 7.6.2).

6.16 ENGINE BONNET

For how to access the fuel cock, the battery and the engine, see 5.2.

6.17 QUICK RELEASE SUPPORTS

These supports allow you to easily and quickly switch from one accessory to another.

The quick release supports allow you to easily move the cutting device between two positions, namely:

- Normal position, with the belt fully taut.
- Position 4 cm back from normal, with the belt slack, so that the cutting device comes closest to the base machine.

Since the tensioner is freed from the belt, the quick release supports make it easy to replace the belt and the cutting device assembly, also making it easier to switch to the washing and working positions.

Belt tension release (17; 18)

See also the instructions supplied with the attachment and with the quick release support.

1. Remove the split pins or locking pins (17:C) from both sides.
2. Open the quick release supports by pressing on the rear sections with your heel (17:A).

Once the quick release supports are open, the attachment arms are free, therefore no longer firmly fixed to the hook.

For any adjustment or maintenance work, replace the arms on the support and close it again

1. Perform the necessary task, such as:

- Unhook the belt.
- Replace the attachment by releasing the arms (19).

Belt tensioning (17; 18)

Tension one side first, then the other following the instructions below.

Do not turn the lever with your hands. There is a risk of crushing injuries.

1. Place a foot on the lever (18:A) and carefully rotate it half a turn forward.
2. Install the split pin or locking pin (17:C).
3. Repeat the operation on the other side.

7 STARTING AND DRIVING

7.1 PRECAUTIONS FOR USE

Always check that the oil level in the engine is correct. This is especially important when working on slopes (see 7.4).

Be very careful when mowing on slopes: do not make sudden starts or brake, do not use the machine crosswise, always move from top to bottom or from bottom to top.

Engage the parking brake when parking the machine.

The machine must not be used on slopes of over 10°, regardless of the mowing direction.

Reduce speed on slopes and sharp turns to avoid overturning or losing control of the machine.

When driving at full speed, do not fully turn the steering wheel. The machine could tip over.

Keep hands and feet away from the articulated steering joint and seat support. There is a risk of crushing injuries.

7.2 COMBINED ATTACHMENT USE

For the combined use of attachments, see the "TABLE FOR THE CORRECT COMBINATION OF ATTACHMENTS" in the "0 TECHNICAL SPECIFICATION TABLE" section

7.3 REFUELLING (20)

Always use unleaded petrol. Do not mix petrol with oil.

For tank capacity, see “”0 TECHNICAL SPECIFICATION TABLE”

To refuel:

1. Unscrew the tank closure cap and remove it (fig. 20.A).
2. Refuel being careful not to completely fill the tank. Leave some space (corresponding at least to the entire filler neck + 1 - 2 cm at the top of the tank) so that, when the petrol heats up, it can expand without overflowing.
3. Close the fuel cap securely after refuelling and clean away any spills.

Do not drip petrol onto the plastic parts to avoid ruining them. In the event of accidental leaks, rinse immediately with water. The warranty does not cover for damage to plastic parts of the bodywork or the engine caused by petrol.

NOTE! Fuel is perishable and should not remain in the tank for more than 30 days.

Environmentally friendly fuels such as alkylate petrol can be used. The composition of these petrols has a minor impact on people and the environment.

There are no reported negative effects related to their use. However, there are types of alkylate gasoline on the market for which it is not possible to give precise indications regarding their use.

For further information, please consult the instructions and data provided by the alkylate petrol manufacturer.

In use prior to storage for a long period, (e.g. winter season), fill the tank with a quantity of fuel sufficient to complete that last use.
In fact, before storing the machine, the fuel tank must be completely emptied (see 11).

7.4 CHECKING THE ENGINE OIL LEVEL (21; 22)

The machine is delivered with a full tank of oil in the engine.

Before starting the machine, check the oil level in the engine.

To check/top up the engine oil see 9.5.1.

7.5 CHECKING THE TRANSMISSION OIL LEVEL

To check/top up the transmission oil see 9.7.1.

7.6 SAFETY CHECKS

When testing the machine, verify that the results of the safety checks match the results in the following tables.

Always carry out the safety checks before use.

If any of the results fails to match the indications provided in the following tables, do not use the machine!

Take it to a service centre to be checked and repaired if necessary.

7.6.1 General safety check

Object	Result
Fuel lines and connections.	No leaks.
Electrical cables	All insulation intact. No mechanical damage.
Unloading system.	No losses in connection points. All screws are tight.
Oil lines	No leaks. No damage.
Drive the machine forwards and in reverse and release the drive pedal.	The machine stops.
Test driving	No abnormal vibrations. No abnormal sound.

7.6.2 Electrical safety check

Status	Action	Result
The parking brake pedal is not pressed.	Try to start it.	The engine does not start.
Engine running.	The operator gets up from the seat.	The engine stops.

7.7 START-UP/WORKING

When using the machine, the bonnet must be closed and locked.

Always use full gas when using the machine.

When starting the machine wait 2 seconds in the start position before starting the engine.

1. Open the fuel stopcock (24).
2. Check that the spark plug leads are inserted into their spark plugs.
3. Make sure the power socket is disconnected (11:D; 12:D).
4. Do not keep your foot on the service/drive brake pedal (10:F).

Cold start

For 2WD models

1. Put into gear (14:A1).

For 4WD models

1. Put into gear (15:A1-B1).
2. Engage the parking brake (10:B)
3. Move the accelerator to full throttle (11:A; 12:A).
4. Close the choke (12:B1) (if applicable).
5. Turn the ignition key and start the engine.

Before operating the machine, wait a few minutes to allow the oil to heat up.

Hot start

For 2WD models

1. Put into gear (14:A1).

For 4WD models

1. Put into gear (15:A1-B1).
2. Engage the parking brake (10:B)
3. Move the accelerator to full throttle (11:A; 12:A).
4. The choke control must be pressed (12:B2) (if applicable).
5. Turn the ignition key and start the engine.

To continue see the instructions given in paragraph 7.7.1.

7.7.1 Run

To operate with the machine proceed as described below:

- Fully press the pedal down (10:B) and release it.
- Press the pedal (10:F) to drive the machine.
- Move to the work area.
- If front attachments are installed, activate the power socket (11:D, 12:D).
- Start work.

7.8 STOP

Proceed as described below to stop the machine:

- Disconnect the power socket (11:D; 12:D).
- Engage the parking brake (10:B)
- Let the engine run at minimum for one or two minutes.
- Turn of the engine by turning the key.
- Close the fuel stopcock. This indication is particularly important if the machine is to be transported on a trailer or similar.

If you have to leave the machine unattended, disconnect the spark plug leads and remove the ignition key.

The engine could be very hot immediately after switching off. Do not touch the muffler, the engine or the cooling fins. This can cause burn injuries.

7.9 CLEANING

To reduce the risk of fire, make sure there are no grass, leaves and oil on the engine, muffler, battery and fuel tank

To reduce the risk of fire, regularly check the machine for oil and/or fuel leaks.

Never use high pressure jets of water. It could damage shaft seals, electrical components and hydraulic valves.

Always clean the machine after use. Follow the instructions below to clean:

- Do not spray water directly on the engine.
- Clean the engine with a brush and/or compressed air.
- Clean the engine cooling air intake.
- After washing with water, start the machine and the cutting device to remove any excess water that could penetrate the bearings and cause damage.

8 ATTACHMENT USE

Check that there are no foreign bodies such as stones, etc. in the grass to be cut.

8.1 CUTTING HEIGHT

For best results, cut one third of the height of the grass. See fig. 23.

If the grass is long and needs to be cut significantly, mow twice using two different cutting heights.

Do not use the minimum cutting height if the surface is uneven.

The cutting devices could be damaged by hitting the surface, undermining the top layer of the lawn.

8.2 MOWING TIPS

To obtain excellent mowing results, follow the instructions below.

- Mow the grass frequently.
- Run the engine at full speed.
- The grass should not be wet.
- Use sharp cutting devices.
- Keep the bottom of the cutting device assembly clean.

9 MAINTENANCE

9.1 SERVICE PROGRAM

To always keep the machine in good condition as regards reliability, operating safety and attention to the environment, always follow the STIGA SpA service program.

The intervention points of this program are illustrated in the attached STIGA SpA maintenance manual.

The Basic Check must always be carried out by an authorised workshop.

The First check and Intermediate check should be carried out by an authorised workshop, but can also be carried out by the user.

The procedures are reported in the manual and are described in the chapter “7 STARTING AND DRIVING”, as well as below.

The checks carried out by an authorised workshop guarantee professional work and original spare parts.

The booklet is stamped at each Basic check and at each Intermediate check carried out by an authorised workshop. A booklet with these stamps increases the value of second-hand machines.

9.2 PREPARATION

All maintenance and control interventions must be performed with the machine stationary and the engine switched off.

Always apply the parking brake to prevent the machine from moving.

Stop the engine.

Avoid accidental engine starts by disconnecting the spark plug cables and removing the ignition key.

9.3 MAINTENANCE TABLE

See chapter “13 SUMMARY MAINTENANCE TABLE”. The table will help you maintain your machine’s safety and performance. It summarises the main interventions to be made and the frequency applicable to each of them. Carry out the relevant intervention according to the first deadline.

Change the oil more often if the engine has to run in difficult conditions or at a high ambient temperature.

9.4 TYRE PRESSURE

Adjust tyre pressure to the values indicated in "0 TECHNICAL SPECIFICATION TABLE"

9.5 ENGINE OIL TOP UP/CHANGE

For this maintenance, see also the engine manual supplied with the machine.

9.5.1 Check/top-up (21; 22)

Always check the oil level before use. Always check the oil level before use.

1. Wipe around the dipstick.
2. Unscrew and remove the dipstick.
3. Wipe the dipstick clean.

For engines [ST.]

4. Push the dipstick down completely without screwing it into place (21:A).

For engines [B&S Vanguard]

4. Push the dipstick down completely without screwing it into place (22:A).

5. Pull the dipstick out again and check the oil level.
6. Top up if the level is lower than the upper limit mark (21:A, 22:A).

The oil level must never exceed the upper limit mark. The engine would overheat. If the oil level exceeds the upper limit mark, it is necessary to drain to the correct level.

Change the oil more often if the engine has to run in difficult conditions or at a high ambient

temperature.

9.5.2 Change/filling (21; 22)

For the intervention timing see chapter 13.

For the type of oil see "0 TECHNICAL SPECIFICATIONS TABLE"

Use oil without additives.
Change the oil with the engine warm.

The oil may be very hot if removed just after the engine has been switched off. Consequently allow the engine to cool down for a few minutes before proceeding to drain off the oil.

[ST. mod. TRE 0801], [B&S Vanguard]
Proceed as follows:

1. Place the machine on a flat surface.
2. Engage the parking brake.
3. Open the engine bonnet.
4. Grasp the clamp on the oil drain hose. Use adjustable pliers, polygrip or similar (21:B, 22:B).
5. Move the clamp along the oil drain hose upwards by 3-4 cm and remove the cap.
6. Collect the oil in a container.

NOTE! Be careful not to spill oil on the drive belts.

7. Insert the oil drain plug and slide the clamp back over the plug.
8. Clean up any spills.
9. Remove the dipstick and top up with new oil. For the quantity of oil see "0 TECHNICAL SPECIFICATIONS TABLE"
10. Each time you fill, start the engine and idle for 30 seconds.
11. Check there are no oil leaks.
12. Stop the engine. Wait 30 seconds and check the oil level again as indicated in paragraph 9.5.
13. Hand the spent oil over to a disposal facility in accordance with local provisions.

[ST. mod. TRE 586V]

1. Place the machine on a flat surface.
2. Engage the parking brake.
3. Open the engine bonnet.
4. Place a suitable container under the extension tube (fig. 22.B);
5. Press the split pin (fig. 22.C);
6. Unhook the extension tube from the support bringing it downwards;
7. Bend the extension tube and empty the oil into a suitable container;
8. Hook the extension tube (fig. 22.B) back to the support (fig. 22.D) before topping up the oil.
9. Clean up any spills.

NOTE! Be careful not to spill oil on the drive belts.

10. Remove the dipstick and top up with new oil. For the quantity of oil see "0 TECHNICAL SPECIFICATIONS TABLE"
11. Each time you fill, start the engine and idle for 30 seconds.
12. Check there are no oil leaks.
13. Stop the engine. Wait 30 seconds and check the oil level again as indicated in paragraph 9.5.1.
14. Hand the spent oil over to a disposal facility in accordance with local provisions.

9.5.3 Oil filter replacement (if applicable)

For this maintenance, see also the engine manual supplied with the machine.

For the intervention timing see chapter 13.

We recommend contacting an authorised service centre for this maintenance.

First, drain the engine oil and insert the drain plug as described above.

Hand the spent oil over to a disposal facility in accordance with local provisions.

9.6 FUEL FILTER REPLACEMENT

For this maintenance, see the engine manual supplied with the machine.

For the intervention timing see chapter 13.

After installing the new filter, check for fuel leaks.

9.7 TRANSMISSION OIL CHECK/TOP-UP [4WD]

For the intervention timing see chapter 13.

For the type and quantity of oil see "0 TECHNICAL SPECIFICATIONS TABLE"

9.7.1 Check/top-up (26)

1. Place the machine on a flat surface.
2. Check the oil level in the tank (26:A) The level should be on the line.
3. Top up if necessary

9.7.2 Change

Oil drain

1. Run the machine at various speeds for 10-20 minutes to warm up the transmission oil.
2. Place the machine on a flat surface.
3. Engage the parking brake.
4. Move the release levers to position A1 - B1 as shown in fig. (15:A; 15:B).
5. Place a container under the rear axle and one under the front one.
6. Open the engine bonnet and remove the oil tank cap.

For the oil drain plug, use only a 3/8" square fitting. Other tools could damage the cap.

7. Remove the oil drain plug from the rear axle (27:A).
8. Remove the 2 drain plugs from the front axle. Use a 12mm socket wrench. Drain the oil in the front axle and pipes (28).
9. Check that the gaskets on the front axle drain plugs are intact (28). Refit the caps. Tightening torque 15-17 Nm.
10. Check that the gaskets on the rear axle drain plugs are intact (27:A). Refit in the rear axle. Tighten the oil drain cap to a torque of 5 Nm.

The oil drain plug may be damaged if tightened with a torque greater than 5 Nm.

11. Remove the oil from the deepest section of the tank with an oil extractor (29).
12. Dispose of the oil in accordance with local regulations.

Filling

1. Fill the oil tank with new oil
2. Check that the rear axle clutch release lever is disengaged.
3. Start the engine. When the engine is started, the front axle drive disengagement lever automatically moves inward.

Never operate the engine when the rear axle drive release lever is engaged and the front axle drive release lever is disengaged (15:A; 15:B). The front axle gaskets could be damaged.

If the engine is started indoors, an exhaust extraction device must be connected to the engine exhaust pipe.

4. Disengage the front axle drive release lever.

NOTE! The oil is quickly drawn into the system. The tank must be continuously topped up, until it remains full, to fill the circuit and to ensure that no air is drawn into the system, which must never happen.

5. Adjust the accelerator pedal forward by locking it with a wooden wedge (30).
6. Run forward for one minute.
7. Move the wooden wedge and adjust the accelerator pedal to the opposite position. Continue topping up oil.
8. Run in the opposite direction for one minute.
9. Change the direction every minute as indicated above and continue to top up oil until there is no more bubbling in the tank.
10. Switch off the engine, replace the oil tank cover (26:B) and close the engine bonnet.
11. Run the machine at various speeds for a few minutes and if necessary adjust the oil level in the tank.

9.8 BELT TRANSMISSION CHECK

Check that all belts are intact.

For the intervention timing see chapter 13.

9.9 STEERING

For the intervention timing see chapter 13.

9.9.1 Checks

Turn the steering wheel slightly back and forward. There should not be any mechanical play in the steering chains.

9.9.2 Adjustment (32)

If necessary, adjust the steering chains as

follows:

1. Straighten the machine wheels.
2. Adjust the steering chains by means of the two nuts placed under the central point (32).
3. Adjust both nuts equally until any play is eliminated.
4. Test the machine by moving it forward in a straight line and check that the steering is not off-centre.
5. If the steering is off-centre, loosen one nut and tighten the other.

Do not over-tighten the steering chains. This would stiffen steering and increase the wear on its chains.

9.10 BATTERY

For the type of battery used on the machine see "0 TECHNICAL SPECIFICATIONS TABLE"

WARNING! The acid contained inside the battery is corrosive and its contact is harmful.

Handle the battery carefully taking care not to let it leak out.

If acid comes into contact with the eyes or skin it can cause serious injury. If any part of the body comes into contact with the acid, rinse it immediately with plenty of water and seek medical attention as soon as possible.

Battery fluid does not need to be checked or topped up.

The only maintenance required is to charge the battery, for example after a long period of storage.

The battery can be charged:

- by the engine
- by a battery charger

9.10.1 Charging by the engine

This mode is only possible if the battery has a minimum charge that allows starting.

- in case of a new battery, connect the cables to the battery.
- Take the machine outdoors.
- Start the engine following the instructions in this manual.
- Run the engine continuously for 45 minutes (time required to fully charge the battery).
- Stop the engine.

9.10.2 Charging by a battery charger

Use a constant voltage charger. Using a standard charger can damage the battery.

For more information, contact your local dealer.

Before connecting the charger, disconnect the battery from the electrical system.

9.10.3 Disassembly/assembly

The battery is located under the engine bonnet.

Connect and disconnect the cables as follows when assembling or disassembling the battery:

1. During disassembly. First, disconnect the black cable from the negative battery terminal (-). The disconnect the red cable from the positive battery terminal (+).
2. During assembly. First connect the red cable to the positive battery terminal (+). Then connect the black cable to the negative battery terminal (-).

The battery may short or be damaged if the cables are disconnected/connected in the reverse order.

The alternator and battery will be damaged if the cables are interchanged.

Securely tighten the cables. Loose cables can cause fire.

Never run the engine if the battery is not connected. The alternator and electrical system could be seriously damaged.

9.10.4 Cleaning

If the battery terminals are oxidized, they need to be cleaned.

Clean the battery terminals with a wire brush and grease them.

9.11 AIR FILTER, ENGINE

For the intervention timing see chapter 13.

For this maintenance, see also the engine manual supplied with the machine.

9.11.1 Cleaning/Replacement

For the intervention timing see chapter 13.

NOTE! Filters need to be cleaned/replaced more often if the machine is working on very dusty ground.

Remove/install the air filters as follows:

[B&S Vanguard] (33)

1. Carefully clean the area around the air filter cover.
2. Disassemble the air filter cover (33:A) by removing the two clips.
3. Remove the filter assembly (33:B). The pre-filter is located above the air filter. Prevent dirt from entering the carburettor. Clean the air filter housing.
4. Clean the paper filter by gently tapping it against a flat surface. If it is very dirty, replace the filter.
5. Clean the pre-filter. If it is very dirty, replace it.
6. Reassembly in reverse order to disassembly.

[ST.] (34)

1. Clean the area around the filter cover (34:C).

mod. TRE 0801

2. Remove the cover (34:C) by unscrewing the two knobs (34:D).

mod. TRE 586 V

2. Open the cover (34:C) by turning the opening knob (34:D).

3. Remove the filtering element (34:E, 34:F).
4. Remove the foam pre-filter (34:F) from the cartridge (34:E).
5. Tap the cartridge (34:E) on a solid surface and blow with compressed air from the inside to remove dust and debris.
6. Wash the foam pre-filter (34:F) with water and detergent and allow it to air dry.
7. Clean the inside of the filter housing (37:G) from dust and debris, taking care to close the intake duct with a rag (34:H) to prevent them from entering the engine.
8. Remove the rag (34:H), arrange the filtering element (34:E, 34:F) in its housing and reassemble the cover (34:C).

IMPORTANT *Do not use water, petrol, detergents or any other products to clean the cartridge.*

IMPORTANT *The foam pre-filter (34:F) should NOT be greased.*

9.11.2 Replace the spark plug

For the intervention timing see chapter 13.

For this maintenance, see also the engine manual supplied with the machine.

Before removing the spark plug, clean the area surrounding its installation point.

For the type of spark plug and electrode distances, see "0 TECHNICAL SPECIFICATIONS TABLE"

9.11.3 Air vent cleaning

For the intervention timing see chapter 13.

The engine is air cooled.

If the cooling system is blocked, the engine could be damaged.

Make sure the cooling air vents are not obstructed.

A more thorough cleaning of the cooling system is performed during each Basic Check.

9.12 LUBRICATION (31)

For the intervention timing see chapter 13.

Object	Action	Fig.
Central point	4 lubricators Use a grease gun filled with universal grease. Pump until grease flows out	31A
Steering wheel chain	Clean the chain with a wire brush. Lubricate with universal chain spray	-

Object	Action	Fig.
Tension arms	Lubricate the support points with oil upon activation of each control. This should be done by two people.	31B
Control wires	Lubricate the wire ends with oil upon activation of each control. This should be done by two people.	31C

9.13 FUSES (35)

Use	Fuse
Fuel valve power.	10 A
Cutting height electrical adjustment power.	20 A
Electric system power.	30 A

10 ASSISTANCE AND REPAIRS

This manual provides all the necessary information to run the machine and for correct basic maintenance operations which can be performed by the user.

Any regulations and maintenance operations not described herein must be carried out by your Dealer or Authorised Service Centre, which have the necessary knowledge and equipment to ensure that the work is carried out correctly, maintaining the correct degree of safety and the original operating conditions of the machine.

Before performing any service operations:

a. Place the machine on a flat surface.
b. Engage the parking brake (10:B)
c. Stop the engine.
d. Remove the key from the ignition.

Authorised service workshops carry out repairs and maintenance under warranty.

They only use original spare parts.

Original STIGA SpA spare parts and accessories have been designed specifically for STIGA SpA machines. Please note that non-original spare parts and accessories have not been verified and approved by STIGA SpA.

The use of non-genuine spare parts and attachments could adversely affect machine operation and safety. STIGA SpA shall not be liable for any injuries or damage caused by such parts.

Genuine spare parts are supplied by authorised assistance workshops and dealers.

It is advisable to send your machine once a year to an authorized service workshop for servicing, assistance and safety device inspection.

11 STORING

1. Empty the fuel tank:
   - Start the machine engine and let it run until it stops.
1. Change the oil when the engine is still warm.
2. Clean the entire machine. It is especially important to clean the underside of the cutting device assembly.
3. If the paint is damaged, touch-up the areas to prevent rusting.
4. Store the machine indoors in a dry place.

In machines with electric starter:
If the storage temperature is correct, a maintenance charge of the battery every four months is sufficient.

Before storing the machine, charge the battery.

The battery suffers serious damage if stored when dead.

12 PURCHASE CONDITIONS

The warranty covers all material and manufacturing defects.

The user must follow all the instructions provided in the accompanying documentation.

The warranty does not cover damages caused by:

- Failure to become familiar with the documentation accompanying the machine.
- Carelessness.
- Incorrect or prohibited use or assembly.
- Use of non-genuine spare parts.
- Use of accessories not supplied or approved

by STIGA SpA.

The warranty does not cover:

- Normal consumable material wear such as worm screws, etc.
- Normal wear and tear.
- Engines. Engines are covered by the warranty provided by the relative manufacturer in compliance with the specified terms and conditions.

The purchaser is protected by his or her own national legislation. The purchaser's rights under the national laws or his or her own country are not in any way restricted by this warranty.

13 SUMMARY MAINTENANCE TABLE

Intervention	**Frequency working hours/calendar months**		**Par. / Ref. fig.**
	First time	**Subsequently**	
MACHINE			
Check all fasteners	-	Before each use	-
Safety checks/check controls	-	Before each use	-
Tyre pressure check	-	Before each use	-
General cleaning and inspection	-	After each use	-
General lubrication	-	50 hours and after each cleaning	9.12
Check transmission belt wear	5 hours	50 hours	9.8
Check/adjust the steering wheel	5 hours	100 hours	9.9
Battery power reserve	-	Before storage. In machines with electric starter: charge every 4 months	9.10
Clean battery terminals	-	When oxidised	9.10.4
ENGINE/TRANSMISSION (general)			
Check/top-up engine oil	-	Before each use	9.5.1
Check/top up drive oil	1 hour	50 hours	9.7.1
Transmission oil change	5 hours	200 hours	9.7.2
Engine mod. B&S Vanguard			
Replacement of the engine oil	-	100 hours/Once a year	9.5.2
Oil filter replacement	-	100 hours/Once a year	9.5.3
Air filter cleaning	-	25 hours/Once a year	9.11.1 *
Air filter replacement	-	100 hours or once a year	9.11.1 (*)
Spark plug replacement	-	100 hours/Once a year	9.11.2
Air vent cleaning	-	5 hours/After each use	9.11.3
Check/replace fuel filter	-	400 hours/Once a year	9.6 (**)
Engine mod. ST.			

Intervention	Frequency working hours/calendar months		Par. / Ref. fig.
Engine oil change (mod. TRE 586V)	5 hours	100 hours	9.5.2
Engine oil change (mod. TRE 0801)	5 hours	50 hours/End of season	9.5.2
Air vent cleaning	-	5 hours/After each use	9.11.3
Air filter cleaning	-	5 hours/After each use	9.11.1 *
Paper air filter replacement	-	50 hours/End of season	9.11.1 *
Check/adjust spark plugs	-	50 hours/End of season	9.11.2
Replace the spark plug	-	100 hours	9.11.2
Check/replace fuel filter	-	100 hours	9.6 **

(*) Clean more frequently in particularly harsh working conditions or if there is debris in the air.
(**) The operation must be carried out by your Dealer or an authorised Service Centre

14 TROUBLESHOOTING

Problem	Probable cause	Solution
1. Starter motor does not run.	Insufficiently charged battery.	Charge the battery.
	Badly connected battery.	Check connections
	20A fuse blown	Replace the fuse
2. The starter motor runs but the engine does not start With the ignition key in the start position, starter motor runs but the engine does not start.	Fuel stopcock closed.	Open the fuel stopcock.
	Faulty fuel supply.	- Check the level in the tank. - Check the fuel filter.
	Faulty ignition.	- Check that spark plug cap is securely fitted. - Check that the electrodes are clean and have the correct gap.
3. Starting is difficult or the engine runs erratically.	Carburetion problems.	Clean or replace the air filter.
4. Weak engine performance during cutting.	Forward speed too high in relation to cutting height.	Reduce the forward speed and/ or raise the cutting height.
5. The engine stops, without any warning sound.	- No fuel. - Try to restart the engine.	Fill up with fuel (if the problem persists, contact an authorised service centre).

Problem	Probable cause	Solution
6. Uneven cut.		Check tyre pressure.
	The cutting device is dull.	Contact an authorised service centre.
	Forward speed too high compared to height of grass.	Reduce the forward speed and/ or raise the cutting height.
	Cutting device assembly is full of grass.	- Wait for the grass to dry. - Clean the cutting device assembly
7. Abnormal vibrations during use.	- The cutting devices are unbalanced. - The cutting devices are loose. - Loose parts. - potential damages.	Contact an authorised service centre for checks, replacements or repairs.
8. With the engine running, the machine does not move when the drive pedal is pressed.	“Gear disengagement” lever in disengaged position.	Put into gear.
If one of the problems listed below occurs, replace the pertinent fuse.		
9. The engine does not start or stops immediately after starting. The battery is charged.	10A fuse faulty.	Replace the 10A fuse.
10. Electrical cutting height adjustment does not work	20A fuse faulty.	Replace the 20A fuse.
11. No electric function works. The battery is charged.	30A fuse faulty.	Replace the 30A fuse.

If problems persist after having performed the above operations, contact your dealer.

Warning! Do not take on complicated repair work without the necessary equipment and technical knowledge. The guarantee is automatically revoked and the manufacturer declines all responsibility for any poorly effected repairs.

DICHIARAZIONE CE DI CONFORMITÀ (Istruzioni Originali)
(Direttiva Macchine 2006/42/CE, Allegato II, parte A)

1. La Società: ST. S.p.A. – Via del Lavoro, 6 – 31033 Castelfranco Veneto (TV) – Italy
2. Dichiara sotto la propria responsabilità, che la macchina:

Tosaerba con conducente a bordo seduto (taglio erba)

a) Tipo / Modello Base:	P 901 C - P 901 CH - P 901 P - P 901 PH - P 901 C W - P 901 C 4W
c) Numero di Serie:	22A••FMV000001 ÷ 99L••FMV999999
d) Motore:	a scoppio

3. È conforme alle specifiche delle direttive:
   - MD: 2006/42/EC
   - OND: 2000/14/EC, ANNEX VI - 2005/88/EC
     D. Lgs.262/2002, ANNEX VI, proc. 1 (Italy)
     e) Ente certificatore: N. 0197 – TÜV Rheinland LGA Products GmbH
     Tillystrasse 2, 90431 Nürnberg – Germany
   - EMCD: 2014/30/EU
   - RoHS II: 2011/65/EU - 2015/863/EU

4. Riferimento alle norme armonizzate:
   EN ISO 5395-1:2013 + A1:2018
   EN ISO 5395-3:2013 + A1:2017 + A2:2018
   EN 55012:2007 + A1:2009
   EN ISO 14982:2009
   EN 63000:2018

g) Livello di potenza sonora misurato:	100 dB(A)
h) Livello di potenza sonora garantito:	100 dB(A)
i) Ampiezza di taglio:	95, 100, 105, 110, 125 cm

n) Persona autorizzata a costituire il Fascicolo Tecnico: ST. S.p.A.
Via del Lavoro, 6
31033 Castelfranco Veneto (TV) - Italia

o) Castelfranco Veneto, 01/10/2022

CEO Stiga Group
Sean Robinson

171516174/6

UK DECLARATION OF CONFORMITY
(Supply of Machinery (Safety) Regulations 2008, S.I. 2008 No. 1597, Annex II, part A)

1. The company: ST. S.p.A. – Via del Lavoro, 6 – 31033 Castelfranco Veneto (TV) – Italy
2. Hereby declares under its own responsibility that the machine:

Ride-on lawnmower with seated operator (grass cutting)

a) Homologation type:	P 901 C - P 901 CH - P 901 P - P 901 PH - P 901 C W - P 901 C 4W
c) Serial number:	22A••FMV000001 ÷ 99L••FMV999999
d) Engine:	petrol

3. Conforms to UK Regulations:
   - S.I. 2008/1597 - Supply of Machinery (Safety) Regulations 2008
   - S.I. 2001/1701 - Schedule 9 - Noise Emission in the Environment by Equipment for use Outdoors Regulations 2001

     e) Notified body: N. 0197 – TÜV Rheinland LGA Products GmbH
     Tillystrasse 2, 90431 Nürnberg – Germany
   - S.I. 2016/1091 - Electromagnetic Compatibility Regulations 2016
   - S.I. 2012/3032 - The Restriction of the Use of Certain Hazardous Substances in Electrical and Electronic Equipment Regulations 2012

4. Reference to harmonised standards:
   EN ISO 5395-1:2013 + A1:2018
   EN ISO 5395-3:2013 + A1:2017 + A2:2018
   EN 55012:2007 + A1:2009
   EN ISO 14982:2009
   EN 63000:2018

g) Measured sound power level:	100 dB(A)
h) Guaranteed sound power level:	100 dB(A)
i) Cutting width:	95, 100, 105, 110, 125 cm

n) Person authorised to compile the technical file:	ST. S.p.A. Via del Lavoro, 6 31033 Castelfranco Veneto (TV) - Italia
o) Castelfranco Veneto, 01/10/2022	CEO Stiga Group Sean Robinson

UK Importer: STIGA LTD
Unit 8, Bluewater Estate Plympton,
Devon, PL7 4JH, England

171516174/6

FR (Traduction de la notice originale) **Déclaration CE de Conformité** **(Directive Machines 2006/42/CE, Annexe II, partie A)** **1. La Société** **2. Déclare sous sa propre responsabilité que la machine : Tondeuse à gazon à conducteur assis/ coupe du gazon** **a) Type / Modèle de Base** **c) Série** **d) Moteur: moteur essence** **3. Est conforme aux prescriptions des directives :** **e) Organisme de certification** **4. Renvoi aux Normes harmonisées** **g) Niveau de puissance sonore mesuré** **h) Niveau de puissance sonore garanti** **i) Largeur de coupe** **n) Personne habilitée à établir le Dossier Technique :** **o) Lieu et Date**	**EN** (Translation of the original instruction) **EC Declaration of Conformity** **(Machine Directive 2006/42/EC, Annex II, part A)** **1. The Company** **2. Herby declares under its own responsibility that the machine: ride-on lawnmower with seated operator/ Grass cutting** **a) Type / Base Model** **c) Serial number** **d) Motor: petrol** **3. Conforms to directive specifications:** **e) Certifying body** **4. Reference to harmonised Standards** **g) Sound power level measured** **h) Sound power level guaranteed** **i) Range of cut** **n) Person authorised to create the Technical Folder:** **o) Place and Date**	**DE** (Übersetzung der Originalbetriebsanleitung**)** **EG-Konformitätserklärung** **(Maschinenrichtlinie 2006/42/EG, Anhang II, Teil A)** **1. Die Gesellschaft** **2. Erklärt auf eigene Verantwortung, dass die Maschine: Aufsitzmäher / Rasenschnitt** **a) Typ / Basismodell** **c) Seriennummer** **d) Motor: Verbrennungsmotor** **3. Den Anforderungen der folgenden Richtlinien entspricht:** **e) Zertifizierungsstelle** **4. Bezugnahme auf die harmonisierten Normen** **g) Gemessener Schallleistungspegel** **h) Garantierter Schallleistungspegel** **i) Schnittbreite** **n) Zur Verfassung der technischen Unterlagen befugte Person:** **o) Ort und Datum**
NL (Vertaling van de oorspronkelijke gebruiksaanwijzing) **EG-verklaring van overeenstemming** **(Richtlijn Machines 2006/42/CE, Bijlage II, deel A)** **1. Het bedrijf** **2. Verklaart onder zijn eigen verantwoordelijkheid dat de machine: Grasmaaier met zittende bediener / grasmaaier** **a) Type / Basismodel** **c) Serienummer** **d) Motor: benzinemotor** **3. Voldoet aan de specificaties van de richtlijnen:** **e) Certificatie-instituut** **4. Verwijzing naar de Geharmoniseerde normen** **g) Gemeten niveau van geluidsvermogen** **h) Gegarandeerd niveau van geluidsvermogen** **i) Snijbreedte** **n) Bevoegd persoon voor het opstellen van het Technisch Dossier** **o) Plaats en Datum**	**ES** (Traducción del Manual Original) **Declaración de Conformidad CE** **(Directiva Máquinas 2006/42/CE, Anexo II, parte A)** **1. La Empresa** **2. Declara bajo su propia responsabilidad que la máquina: Cortadora de pasto con conductor sentado/ Corte hierba** **a) Tipo / Modelo Base** **c) Matrícula** **d) Motor: motor de explosión** **3. Cumple con las especificaciones de las directivas:** **e) Ente certificador** **4. Referencia a las Normas armonizadas** **g) Nivel de potencia sonora medido** **h) Nivel de potencia sonora garantizado** **i) Amplitud de corte** **n) Persona autorizada a realizar el Manual Técnico:** **o) Lugar y Fecha**	**PT** (Tradução do manual original) **Declaração CE de Conformidade** **(Diretiva de Máquinas 2006/42/CE, Anexo II, parte A)** **1. A Empresa** **2. Declara sob a própria responsabilidade que a máquina: Corta-relvas para operador sentado/ corte da relva** **a) Tipo / Modelo Base** **c) Matrícula** **d) Motor: motor a explosão** **3. É conforme às especificações das diretivas:** **e) Órgão certificador** **4. Referência às Normas harmonizadas** **g) Nível medido de potência sonora** **h) Nível garantido de potência sonora** **i) Amplitude de corte** **n) Pessoa autorizada a elaborar o Caderno Técnico** **o) Local e Data**
SL (Prevod izvirnih navodil) **ES izjava o skladnosti** **(Direktiva 2006/42/ES) , priloga II, del A)** **1. Družba** **2. pod lastno odgovornostjo izjavlja, da je stroj: Traktorska kosilnica/ košnja trave** **a) Tip / osnovni model** **c) Serijska številka** **d) Motor: motor z notranjim izgorevanjem** **3. Skladen je z določili direktiv :** **e) Ustanova, ki izda potrdilo** **4. Sklicevanje na usklajene predpise** **g) Izmerjen nivo zvočne moči** **h) Zagotovljen nivo zvočne moči** **i) Obseg košnje** **n) Oseba, pooblaščena za sestavo tehnične knjižice:** **o) Kraj in datum**	**LT** (Originalių instrukcijų vertimas) **EB atitikties deklaracija** **(Mašinų direktyva 2006/42/CE, Priedas II, dalis A)** **1. Bendrovė** **2. Prisiima atsakomybę, kad įrenginys: Balninė vejapjovė su sėdinčiu operatoriumi / žolės pjovimas** **a) Tipas / Bazinis Modelis** **c) Serijos numeris** **d) Variklis: vidaus degimo variklis** **3. Atitinka direktyvose pateiktas specifikacijas:** **e) Sertifikavimo įstaiga** **4. Nuoroda į suderintas Normas** **g) Išmatuotas garso galios lygis** **h) Užtikrinamas garso galios lygis** **i) Pjovimo plotis** **n) Autorizuotas asmuo sudaryti Techninę Dokumentaciją:** **o) Vieta ir Data**	**LV** (Instrukciju tulkojums no oriģinālvalodas) **EK atbilstības deklarācija** **(Direktīva 2006/42/EK par mašīnām, pielikums II, daļa A)** **1. Uzņēmums** **2. Uzņemoties par to pilnu atbildību, paziņo, ka mašīna: Sēžot vadāma zālienu pļaujmašīna/ zāles pļaušana** **a) Tips / Bāzes modelis** **c) Sērijas numurs** **d) Motors: iekšdedzes motors** **3. Atbilst šādu direktīvu prasībām:** **e) Sertifikācijas iestāde** **4. Atsauce uz harmonizētiem standartiem** **g) Izmērītais skaņas intensitātes līmenis** **h) Garantētais skaņas intensitātes līmenis** **i) Pļaušanas platums** **n) Pilnvarotais darbinieks, kas sagatavoja tehnisko dokumentāciju:** **o) Vieta un datums**

NO (Oversettelse av orginal bruksanvisning) **EF- Samsvarserklæring** **(Maskindirektiv 2006/42/EF, Vedlegg II, del A)** **1. Firmaet** **2. Erklærer på eget ansvar at maskinen: Sittegressklipper / gressklipping** **a) Type / Modell** **c) Serienummer** **d) Motor: forbrenningsmotor** **3. Oppfyller kravene i direktivene:** **e) Sertifiseringsorgan** **4. Henvisning til harmoniserte standarder** **g) Målt lydeffektnivå** **h) Garantert lydeffektnivå** **i) Klippebredde** **n) Person som har fullmakt til å utferdige teknisk dokumentasjon:** **o) Sted og dato**	**SV** (Översättning av bruksanvisning i original) **EG-försäkran om överensstämmelse** **(Maskindirektiv 2006/42//EG, bilaga II, de la)** **1. Företaget** **2. Försäkrar på eget ansvar att maskinen Åkgräsklippare / gräsklippning** **a) Typ / Basmodell** **c) Serienummer** **d) Motor: förbränningsmotor** **3. Överensstämmer med föreskrifterna i direktivet** **e) Intygsorgan_ Anmält organ** **4. Referens till harmoniserade standarder** **g) Uppmätt ljudeffektnivå** **h) Garanterad ljudeffektnivå** **i) Skärbredd** **n) Auktoriserad person för upprättandet av den tekniska dokumentationen:** **o) Ort och datum**	**DA** (Oversættelse af den originale brugsanvisning) **EF-overensstemmelseserklæring** **(Maskindirektiv 2006/42/EF, bilag II, del A)** **1. Firmaet** **2. Erklærer på eget ansvar, at maskinen: Havetraktor/ klipning af græsset** **a) Type / Model** **c) Serienummer** **d) Motor: forbrændingsmotor** **3. Er i overensstemmelse med specifikationerne ifølge direktiverne:** **e) Certificeringsorgan** **4. Henvisning til harmoniserede standarder** **g) Målt lydeffektniveau** **h) Garanteret lydeffektniveau** **i) Klippebredde** **n) Person, der har bemyndigelse til at udarbejde det tekniske dossier:** **o) Sted og dato**
FI (Alkuperäisten ohjeiden käännös) **EY-VAATIMUSTENMUKAISUUSVAKUUTUS** **(Konedirektiivi 2006/42/EY, Liite II, osa A)** **1. Yritys** **2. Vakuuttaa omalla vastuullaan, että kone: Päältäajettava ruohonleikkuri / ruohonleikkuu** **a) Tyyppi / Perusmalli** **c) Sarjanumero** **d) Moottori : räjähdysmoottori** **3. On yhdenmukainen seuraavien direktiivien asettamien vaatimusten kanssa:** **e) Sertifiointiyritys** **4. Viittaus harmonisoituihin standardeihin** **g) Mitattu äänitehotaso** **h) Taattu äänitehotaso** **i) Leikkuuleveys** **n) Teknisten asiakirjojen laatimiseen valtuutettu henkilö:** **o) Paikka ja päivämäärä**	**CS** (Překlad původního návodu k používání) **ES – Prohlášení o shodě** **(Směrnice o Strojních zařízeních 2006/42/ES, Příloha II, část A)** **1. Společnost** **2. Prohlašuje na vlastní odpovědnost, že stroj: Sekačka se sedící obsluhou/ sekačka na trávu** **a) Typ / Základní model** **c) Výrobní číslo** **d) Motor: spalovací motor** **3. Je ve shodě s nařízeními směrnic:** **e) Certifikační orgán** **4. Odkazy na Harmonizované normy** **g) Naměřená úroveň akustického výkonu** **h) Zaručená úroveň akustického výkonu** **i) Šířka řezání** **n) Osoba autorizovaná pro vytvoření Technického spisu:** **o) Místo a Datum**	**PL** (Tłumaczenie instrukcji oryginalnej) **Deklaracja zgodności WE** **(Dyrektywa maszynowa 2006/42/WE, Załącznik II, część A)** **1. Spółka** **2. Oświadcza na własną odpowiedzialność, że maszyna: Kosiarka z operatorem jadącym, w pozycji siedzącej na maszynie/ cięcie trawy** **a) Typ / Model podstawowy** **c) Numer seryjny** **d) Silnik: silnik o zapłonie iskrowym** **3. Spełnia podstawowe wymogi następujących Dyrektyw:** **e) Jednostka certyfikująca** **4. Odniesienie do Norm zharmonizowanych** **g) Zmierzony poziom mocy akustycznej** **h) Gwarantowany poziom mocy akustycznej** **i) Szerokość cięcia** **n) Osoba upoważniona do zredagowania Dokumentacji technicznej:** **o) Miejscowość i data**
HU (Eredeti használati utasítás fordítása) **EK-megfelelőségi nyilatkozata** **(2006/42/EK gépirányelv, II. melléklet "A" rész)** **1. Alulírott Vállalat** **2. Felelősségének teljes tudatában kijelenti, hogy az alábbi gép: Vezetőüléses fűnyírógép/ fűnyírás** **a) Típus / Alaptípus** **c) Gyártási szám** **d) Motor: robbanómotor** **3. Megfelel az alábbi irányelvek előírásainak:** **e) Tanúsító szerv** **4. Hivatkozás a harmonizált szabványokra** **g) Mért zajteljesítmény szint** **h) Garantált zajteljesítmény szint** **i) Vágási szélesség** **n) Műszaki Dosszié szerkesztésére felhatalmazott személy:** **o) Helye és ideje**	**RU** (Перевод оригинальных инструкций) **Декларация соответствия нормам ЕС** **(Директива о машинном оборудовании 2006/42/ЕС, Приложение II, часть A)** **1. Предприятие** **2. Заявляет под собственную ответственность, что машина: Ездовая косилка с водителем / стрижка газона** **a) Тип / Базовая модель** **c) Паспорт** **d) Двигатель: двигатель внутреннего сгорания** **3. Соответствует требованиям следующих директив:** **e) Сертифицирующий орган** **4. Ссылки на гармонизированные нормы** **g) Измеренный уровень звуковой мощности** **h) Гарантируемый уровень звуковой мощности** **i) Амплитуда кошения** **n) Лицо, уполномоченное на подготовку технической документации:** **o) Место и дата**	**HR** (Prijevod originalnih uputa) **EK Izjava o sukladnosti** **(Direktiva 2006/42/EZ o strojevima, dodatak II, dio A)** **1. Tvrtka:** **2. pod vlastitom odgovornošću izjavljuje da je stroj: Sjedeća kosilica trave s operaterom/ košenje trave** **a) Vrsta / Osnovni model** **c) Matični broj** **d) Motor: motor s unutarnjim izgaranjem** **3. sukladan s temeljnim zahtjevima direktiva:** **e) Certifikacijsko tijelo** **4. Primijenjene su slijedeće harmonizirane norme:** **g) Izmjerena razina zvučne snage** **h) Zajamčena razina zvučne snage** **i) Širina rezanja** **n) Osoba ovlaštena za pravljenje Tehničke datoteke:** **o) Mjesto i datum**

ET (Algupärase kasutusjuhendi tõlge)

EÜ vastavusdeklaratsioon
(Masinadirektiiv 2006/42/EÜ, Lisa II, osa A)
1. Firma
2. Kinnitab omal vastutusel, et masin:
Istuva juhiga muruniitja / muruniitja
a) Tüüp / Põhimudel
c) Matrikkel
d) Mootor: Sisepõlemismootor
3. Vastab direktiivide nõuetele:
e) Kinnitav asutus
4. Viide ühtlustatud standarditele
g) Mõõdetud helivõimsuse tase
h) Garanteeritud helivõimsuse tase
i) Lõikelaius
n) Tehnilise Lehe autoriseeritud koostaja:
o) Koht ja Kuupäev

© by STIGA S.p.A.

IT • Il contenuto e le immagini del presente manuale d'uso sono stati realizzati per conto di STIGA S.p.A. e sono tutelati da diritto d'autore – E' vietata ogni riproduzione o alterazione anche parziale non autorizzata del documento.
CS • Obsah a obrázky v tomto návodu k použití byly zpracovány jménem společnosti STIGA S.p.A. a jsou chráněny autorským právem – Reprodukce či nepovolené pozměňování tohoto dokumentu, a to i částečné, je zakázáno.
DA • Indhold og illustrationer i denne vejledning er blevet skabt på vegne af STIGA S.p.A. og er beskyttet af ophavsret – Enhver gengivelse eller ændring, også delvis, af dokumentet uden autorisation hertil er forbudt.
DE • Inhalt und Bilder dieser Bedienungsanleitung wurden im Namen von STIGA S.p.A. erstellt und sind urheberrechtlich geschützt – Jede nicht genehmigte Vervielfältigung oder Veränderung, auch auszugsweise, dieses Dokuments ist verboten.
EN • The content and images in this User Manual were produced expressly for STIGA S.p.A. and are protected by copyright – any unauthorised reproduction or modification to the document, either partially or in full, is prohibited.
ES • El contenido y las imágenes del presente manual de uso han sido creados por STIGA S.p.A. y están protegidos por los derechos de autor – Se prohíbe toda reproducción o modificación, incluso parcial, no autorizada del documento.
ET • Käesoleva kasutusjuhendi sisu ja kujutised on toodetud konkreetselt ettevõttele STIGA S.p.A. ja neile rakendub autorikaitseseadus – dokumendi igasugune osaline või täielik ilma loata reprodutseerimine või muutmine on keelatud.
FI • Tämän käyttöoppaan sisältö ja kuvat on valmistettu STIGA S.p.A. -yhtiön toimesta ja niitä suojaa tekijänoikeuslaki. – Asiakirjan kaikenlainen kopioiminen tai muuttaminen, osittainkin, on kielletty ilman erityistä lupaa.
FR • Le contenu et les images du présent manuel d'utilisation ont été réalisés pour le compte de STIGA S.p.A. et sont protégés par un droit d'auteur - Toute reproduction ou modification non autorisée, même partielle, du document, est interdite.
HR • Sadržaj i slike u ovom priručniku za uporabu izrađeni su za tvrtku STIGA S.p.A. te su obuhvaćeni autorskim pravima – Zabranjuje se neovlašteno umnožavanje ili prilagodba, djelomična ili u cijelosti, ovog dokumenta.
HU • Ennek a használati útmutatónak a tartalma és a benne szereplő képek kizárólag a STIGA S.p.A. számára készültek és szerzői joggal védettek – tilos a dokumentum bármely részének vagy egészének engedély nélküli sokszorosítása és módosítása.
LT • Šio naudotojo vadovo turinys ir paveikslėliai skirti tik „STIGA S.p.A." ir yra saugomi autorių teisėmis – dokumentą atgaminti ar modifikuoti, visiškai arba iš dalies, yra draudžiama.
LV • Šīs lietotāja rokasgrāmatas saturs un attēli ir veidoti tikai STIGA S.p.A. un ir aizsargāti ar autortiesībām. Jebkāda dokumenta vai tā daļas prettiesiska kopēšana vai pārveide ir stingri aizliegta.
NL • De inhoud en de afbeeldingen van deze gebruikshandleiding werden gerealiseerd voor rekening van STIGA S.p.A. en zijn beschermd door het auteursrecht – Elke niet-geautoriseerde reproductie of wijziging, ook gedeeltelijke, van het document is verboden.
NO • Innholdet og bildene i denne brukerveiledningen er utført på oppdrag fra STIGA S.p.A. og er beskyttet ved opphavsrett - Enhver gjengivelse eller endring, selv kun delvis, er forbudt.
PL • Treść oraz ilustracje zawarte w niniejszej instrukcji obsługi powstały na zlecenie spółki STIGA S.p.A. i są chronione prawami autorskimi – Zabrania się wszelkiego kopiowania bądź modyfikowania, także częściowego, niniejszego dokumentu bez uzyskania stosownej zgody.
PT • As imagens e os conteúdos contidos no presente Manual do Utilizador foram expressamente criados para uso exclusivo da STIGA S.p.A., encontrando-se protegidos por direitos de autor. Qualquer tipo de reprodução ou alteração, parcial ou integral, não autorizadas deste Manual estão expressamente proibidas.
RU • Тесты и изображения, содержащиеся в настоящем руководстве, были созданы в интересах STIGA S.p.A. и защищены авторскими правами – Любое несанкционированное воспроизведение или изменение документа запрещено.
SL • Vsebine in slike v tem uporabniškem priročniku so izdelane za podjetje STIGA S.p.A. in so zaščitene z avtorskimi pravicami – vsakršno nepooblaščeno razmnoževanje ali spreminjanje dokumenta, v celoti ali delno, je prepovedano.
SV • Innehållet och bilderna i denna användarhandbok har framställts för STIGA S.p.A. och skyddas av upphovsrätt – all form av reproduktion eller ändring, även partiell, som inte auktoriserats är förbjuden.

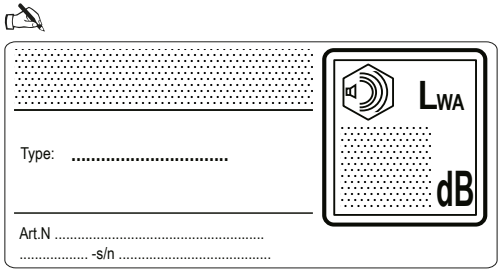

ST. S.p.A.
Via del Lavoro, 6
31033 Castelfranco Veneto (TV) ITALY

STIGA LTD (UK Importer)
Unit 8, Bluewater Estate Plympton,
Devon, PL7 4JH, England