Three Phase Hybrid Inverter High Voltage

User Manual

4/5/6/8/10/12/15KW

NINGBO AUSTA SOLAR TECH CO.,LTD

CONTENTS

1. About This Manual 3

1.1 How To Use This Manual 3

1.2 Target Groups 3

1.3 Symbols used 4

2. Safety Instructions 5

2.1 Safety Notes 5

2.2 Statement 5

2.3 Important safety instructions 6

2.4 Explanation of symbol 9

3. Product Description 10

3.1 System Introduction 10

3.2 Models 10

3.3 Operation Modes 10

3.4 Product overview 16

3.5 Dimension 16

4. Technical data 17

5. Installation 19

5.1 Unpacking 19

5.2 Location 20

5.3 Installation Spacing 21

5.4 Installation Angle 21

5.5 Mounting the Inverter 23

5.6 External Ground Connection 26

6. Electrical Connection 28

6.1 System Electrical Wiring Diagram 29

6.2 AC Output Connection 29

6.2.1 AC Side Requirements 29

6.2.2 Residual Current Monitoring Device 30

6.2.3 AC terminal installation instructions 31

6.3 Battery Connection 33

6.3.1 Battery Side Requirements 33

6.3.2 Installing battery terminals 33

6.4 PV Wiring Connection 34

6.4.1 PV Side Requirements 34

6.4.2 Installing PV terminals 35

6.5 Communication connection 36

6.5.1 communication port 36

6.5.2 Communication line end connector 40

7. Fan Maintenance 44

8. Operation method 45

8.1 Control panel 45

8.2 LCD function 46

8.3 LCD operation 47

CONTENTS

9. Troubleshooting **55**
9.1 General fault table 55
10. Decommissioning **61**
10.1 Dismantling the inverter 61
10.2 Packaging 61
10.3 Storage 61

1.About This Manual

This manual is an integral part of AU4~15KETH series three-phase high-voltage hybrid inverters (hereinafter referred to as the inverter). It mainly introduces the assembly, installation, electrical connection, debugging, maintenance and troubleshooting of the products.

The products, services or features purchased are subject to the commercial contracts and terms of NINGBO AUSTA SOLAR TECH CO., LTD All or part of the products, services or features described in this document may not be within the scope of purchase. This document serves only as a guide to use, and all statements, information and recommendations in this document do not constitute any express or implied guarantee.

Notice: This manual contains important safety instructions that must be followed during installation and maintenance of the equipment.

Copyright Declaration: All rights to the content of this manual are owned by NINGBO AUSTA SOLAR TECH CO., Ltd. (hereinafter called as 'AUSTA Power'). Any corporation or individual should not plagiarize, partially copy or fully copy it, and no reproduction or distribution of it in any form or by any means without prior written permission from AUSTA Power.

1.1 How To Use This Manual

Before installing and using inverters, please read this manual carefully, understand the safety information and be familiar with the functions and characteristics of inverters. The manual content of subsequent versions of the inverter may be subject to change. The latest manual can be found at www.austasolar.net.

1.2 Target Groups

This manual is applicable to electrical installers with professional qualifications and end-users, who should have the following skills:

1.About This Manual

①Training for installation and commissioning of the electrical system, as well as dealing with hazards.
②Knowledge of the manual and other related documents.
③Knowledge of the local regulations and directives.

1.3 Symbols used

⚠	**DANGER!** Indicates a hazard with a high level of risk that, if not avoided, will result in death or serious injury.
⚠	**WARNING!** Indicates a hazard with a medium level of risk that, if not avoided, could result in death or serious injury.
⚠	**CAUTION!** Indicates a hazard with a low level of risk that, if not avoided, could result in minor or moderate injur.
NOTICE	**NOTICE!** Indicates a situation that, if not avoided, could result in equipment or property damage, data loss, equipment performance degradation.
☞	**NOTE!** Indicates additional information, emphasized contents or tips that may be helpful, e.g, to help you solve problems or save time.

2.Safety Instructions

2.1 Safety Notes

① Before installation, please read this manual carefully and strictly follow the instructions in this manual;
② Installation personnel need to be professionally trained or obtain electrical related professional qualifications;
③ Do not open the front cover of the inverter during installation. Unless working at the terminal (as instructed in this manual), touching or replacing components without authorization may cause injury, damage to the inverter and invalidation of warranty;
④ All electrical installations must comply with local electrical safety standards;
⑤ If the inverter needs maintenance, please contact the local designated personnel for system installation and maintenance;
⑥ The use of this inverter to generate electricity requires the permission of the local power supply authority;
⑦ The temperature of some parts of the inverter during operation may exceed 60°C, in order to avoid being burned out, do not touch the inverter during operation, let it cool and then touch;
⑧ When exposed to sunlight, PV arrays can produce dangerously high DC voltages. Please follow our instructions or your life will be in danger;
⑨ When connecting lithium battery terminals, disconnect the circuit breaker or switch of the lithium battery to prevent physical damage caused by high voltage;

2.2 Statement

NINGBO AUSTA SOLAR TECH CO., LTD. has the right not to assume quality assurance under any of the following circumstances:
① Damage caused by improper transportation;
② Damage caused by improper storage, installation or use;
③ Damage caused by installation and use of equipment by non-professional or untrained personnel;
④ Damage caused by failure to comply with the instructions and safety warnings in this document;
⑤ Damage caused by operation in an environment that does not meet the requirements described in this document;
⑥ Damage caused by operation beyond the parameters specified in the applicable technical specifications;

⑦ Damage caused by unauthorized disassembly, modification of product or modification of software code;
⑧ Damage caused by abnormal natural environment (such as lightning, earthquake, fire, storm, etc.);
⑨ Any damage caused by non compliance with local standards and regulations during installation and operation;
⑩ Products that exceed the warranty period;

2.3 Important safety instructions

⚠	**DANGER!** ➢ PV strings can generate electricity when exposed to sunlight and can cause fatal voltages and electric shocks. ➢ Only qualified personnel can connect the PV panel. ➢ Do not open the shell when the inverter is running. Unauthorized opening will void warranties and warranty claims, and in most cases will result in operating license whitening. ➢ When the housing cover is removed, it may come into contact with live components, which may result in death or serious injury due to electric shock.
⚠	➢ Operating a damaged inverter can lead to a dangerous situation that can result in death or serious injury from electric shock. ➢ Batteries provide power, which can cause burns or fire hazards when they short circuit or are incorrectly installed.

2.Safety Instructions

⚠	➢ There is a fatal voltage on the battery terminal and the cable connecting to the inverter. Contact with the cables and terminals in the inverter may result in serious injury or death. ➢ The PV negative (PV-) and battery negative (BAT-) on the inverter side are not designed to be grounded by default. It is strictly prohibited to connect PV or BAT to the earth.
⚠	**WARNING!** ➢ Do not disconnect the PV connector AC connector, or battery connector while the inverter is running. Power off from all multiple power sources. Wait 5 minutes for internal capacitors to discharge. Verify there is no voltage or current before disconnecting any connectors. Use personal protective equipment, including rubber gloves and shields, during installation or maintenance.
⚠	**CAUTION!** ➢ Do not touch any heating parts (such as radiators) during operation, the surface temperature of the inverter may exceed 60 °C during operation.
NOTICE	**NOTICE!** ➢ Electrical installation and maintenace must be carried out by competing electricians in accordance with local regulations.

	➢ Do not open the inverter cover or replace any components without the authorization of AUSTA Power, otherwise the warranty of the inverter will be void. ➢ The use and operation of the inverter must follow the instructions in this user manual, otherwise the protection design may be invalid, and the warranty of the inverter will be void.
	NOTE! ➢ Electrical installation and maintenance must be performed by competing electricians in accordance with local regulations. The inverter built in RCMU will exclude the possibility of DC residual current up to 30mA, so an external RCD (Type A) (⩾ 300mA) can be used in the system.

2.4 Explanation of symbols

This section gives an explanation of all the symbols shown on the type label.

	To avoid potential environmental and human health impacts caused by hazardous substances contained in electrical and electronic equipment, end users of electrical and electronic equipment should be aware of the meaning of the crossed-out wheeled bin symbol. WEEE should not be treated as unsorted multi-city waste , and such WEEE must be collected separately.
	Please read the instructions carefully before installation.
10 min	Do not touch any internal parts of the inverter disconnected from power, battery and PV inputs for 10 minutes.
	CE marking, inverter meets the requirements of applicable CE guide rails.
	Danger. Risk of electric shock!
	The surface is heated during operation, do not touch it.
	Additional grounding point.

3.Product Description

3.1 System Introduction

The hybrid solar system is usually composed of the PV array, hybrid inverter, lithium battery, loads and power grid.

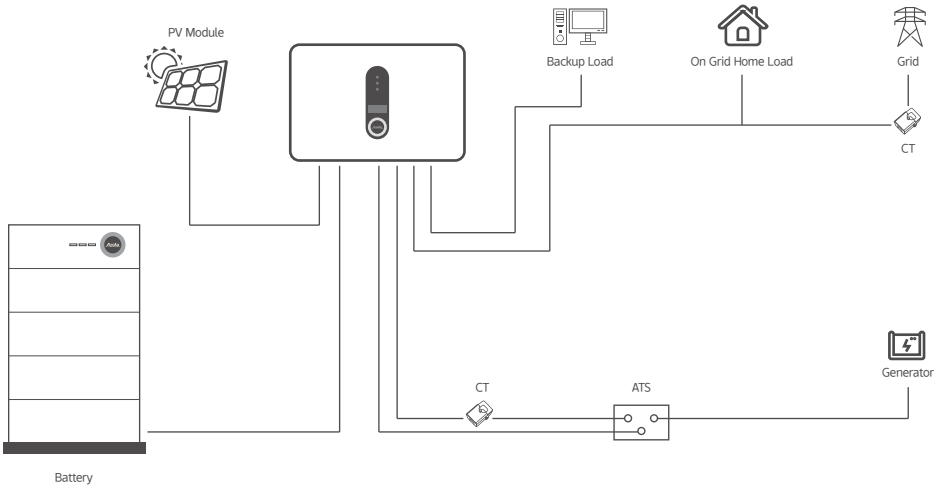

3.2 Models

This product manual is suitable for the following models:AU4KETH；AU5KETH；AU6KETH；AU8KETH；AU10KETH；AU12KETH；AU15KETH.

3.3 Operation Modes

Austa hybrid inverter has the following basic operation mode, you can configure according to your needs in the App to select the operation mode.

3.Product Description

Work mode: Self-use

Priority: load>battery>grid

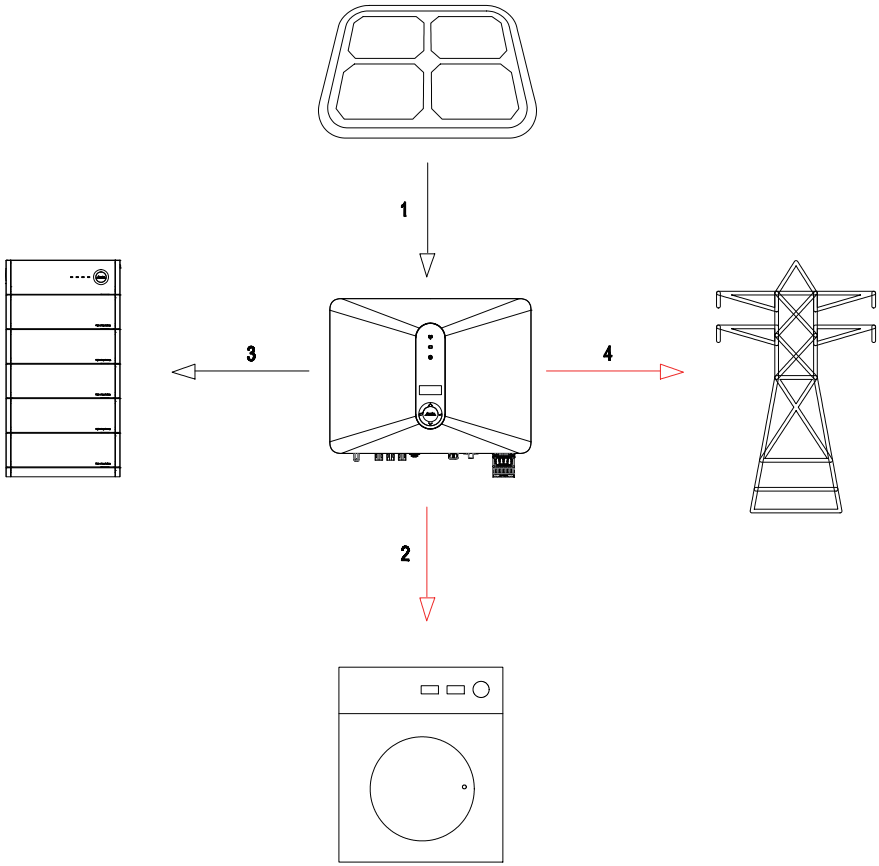

1) Generated solar energy
2) Load consumption
3) Storage in battery
4) Feed the excess solar energy into the grid

PV Self-consumption of renewable energy is a top priority. The excess PV is used to charge the battery and then fed back to the grid.

3.Product Description

Work mode: Feed in Pirority

Priority: load>grid>battery

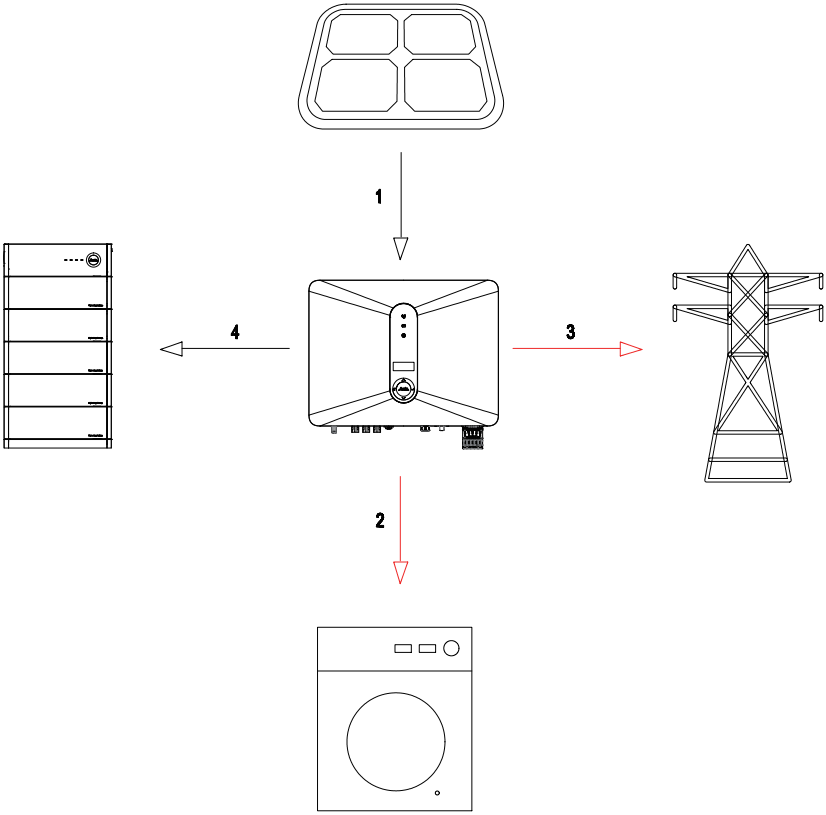

1) Generated solar energy
2) Load consumption
3) Feed into grid
4) Charge the battery

The model is suitable for areas with high feed-in tariffs and export controls. The electricity generated by PV will first be used to supply the load and then fed into the grid. The excess electricity will charge the battery.

3.Product Description

Work mode: Force time use

Priority: battery>load>grid (when charging)

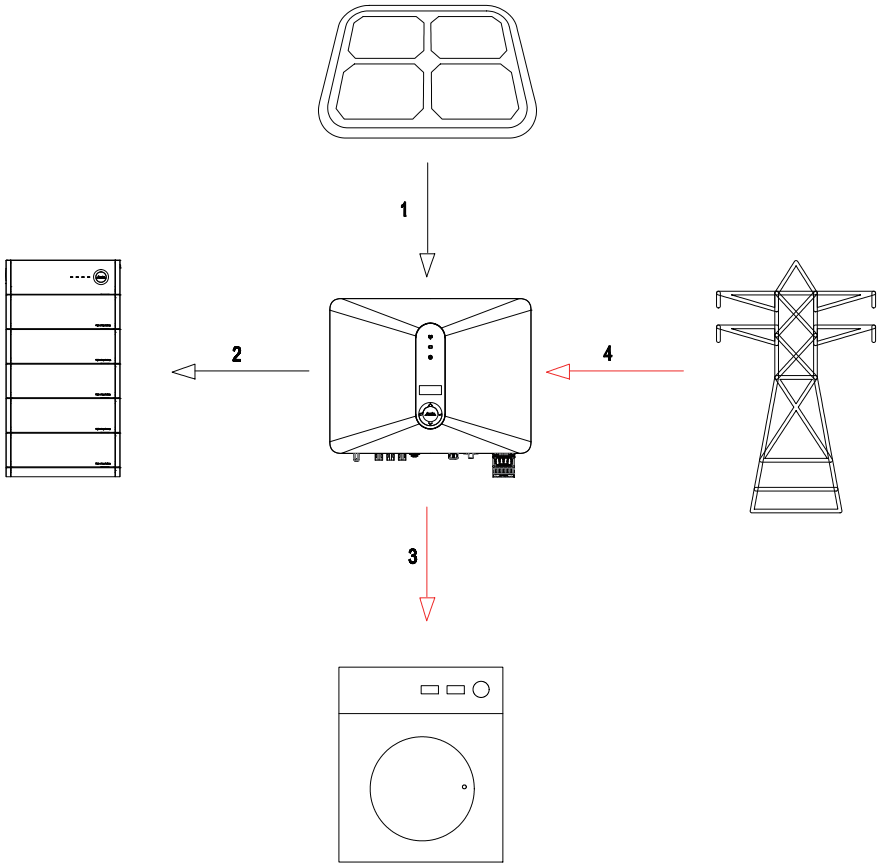

1) Generated solar energy
2) Storage in battery
3) Load consumption
4) Grid supply power when the battery capacity is not enough

3.Product Description

Priority: load>battery>grid (when discharging)

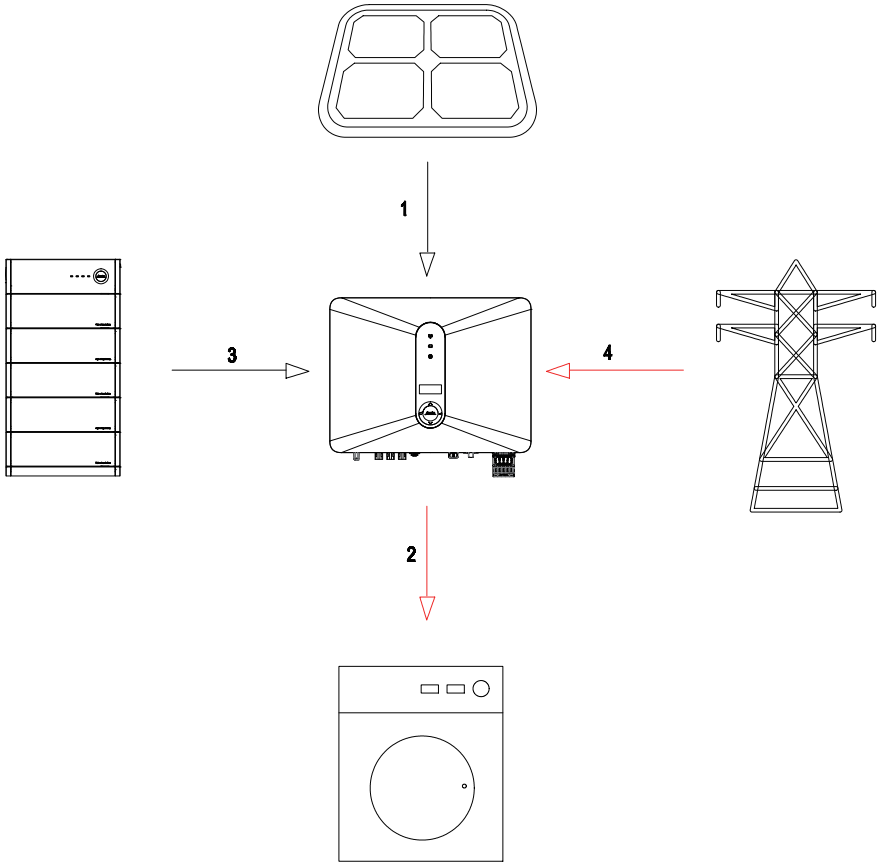

1) Generated solar energy
2) Load consumption
3) Self-use from battery
4) Grid supply power when the battery capacity is not enough

This mode is suitable for areas with electricity prices between peaks and valleys. Users can use off-peak power to charge the battery. The charging and discharging time can be set flexibly , and it is also possible to choose whether to charge from the grid.

3.Product Description

Work mode: Back up mode

Priority: battery>load>grid

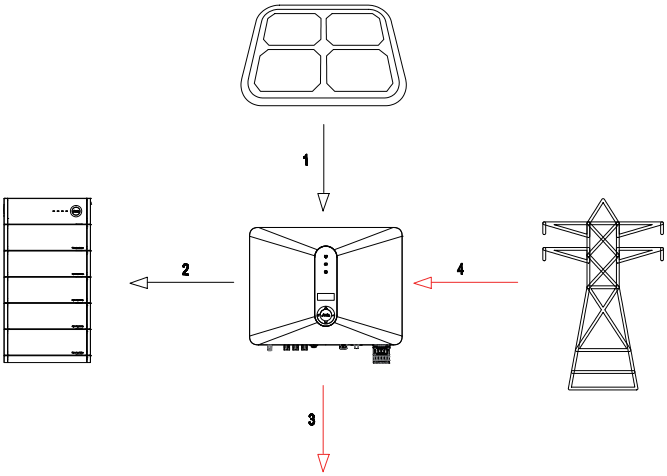

1) Generated solar energy
2) Storage in Battery
3) Load consumption
4) Grid supply power

This mode is suitable for areas with frequent power outages. This mode ensures that the battery has sufficient energy supply in the event of power failure in the grid. In the event of power failure, the backup load can be supported by PV and battery.

⚠	**WARNING!** Make sure the load rated power is within the EPS output rating. Otherwise, the inverter will turn off and issue an "overload" warning. When an "overload" occurs, adjust the load power to make sure it is within the EPS output range, and then turn on the inverter. For nonlinearity loads, pay attention to the surge power and make sure it is within the EPS output range.

3.Product Description

3.4 Product overview

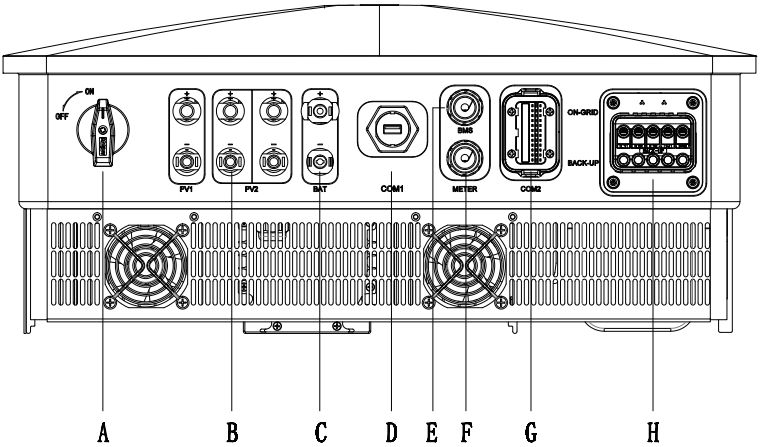

Number	Description	Number	Description
A	DC switch	E	BMS communication port
B	PV connectors	F	METER Communication Port
C	Battery connectors	G	Communication interface module
D	WIFI collector port	H	AC Output Port (On-Grid&Back-Up)

3.5 Dimension

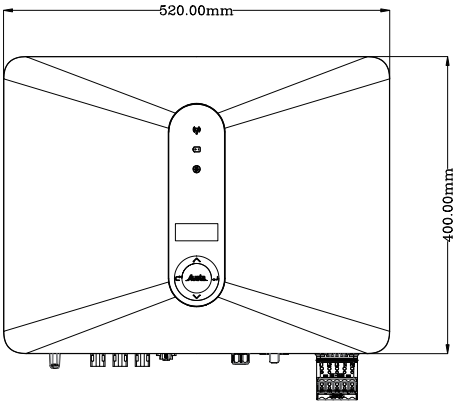

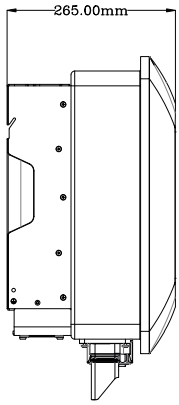

4.Technical data

Model	AU4KETH	AU5KETH	AU6KETH	AU8KETH	AU10KETH	AU12KETH	AU15KETH
PV Input							
Max. DC input power[W]	6000	7500	9000	12000	15000	18000	22500
Max. DC voltage[v]	1000	1000	1000	1000	1000	1000	1000
Rated DC input voltage[V]	620	620	620	620	620	620	620
Start-up voltage[v]	160	160	160	160	160	160	160
MPPT voltage range[v]	160-950	160-950	160-950	160-950	160-950	160-950	160-950
Max. input current[A]	18/18	18/18	18/18	18/18	18/18	18/36	18/36
Max. short circuit current[A]	23/23	23/23	23/23	23/23	23/23	23/46	23/46
Number of MPP trackers	2	2	2	2	2	2	2
Strings per MPP tracker	1/1	1/1	1/1	1/1	1/1	1/2	1/2
AC Output (GRID)							
Rated output power[W]	4000	5000	6000	8000	10000	12000	15000
Max. output apparent power[VA]	4400	5500	6600	8800	11000	13200	16500
Rated output voltage[V]	400/380, 3L/N/PE	400/380, 3L/N/PE	400/380, 3L/N/PE	400/380, 3L/N/PE	400/380, 3L/N/PE	400/380, 3L/N/PE	400/380, 3L/N/PE
Rated output frequency[Hz]	50/60	50/60	50/60	50/60	50/60	50/60	50/60
Max. output current[A]	6.7	8.3	10	13.3	16.5	20	25
THDi(Rated output power)	<2%	<2%	<2%	<2%	<2%	<2%	<2%
Displacement Power Factor	0.8leading… 0.8lagging	0.8leading… 0.8lagging	0.8leading… 0.8lagging	0.8leading… 0.8lagging	0.8leading… 0.8lagging	0.8leading… 0.8lagging	0.8leading… 0.8lagging
AC Input							
Rated input voltage[V]	400/380, 3L/N/PE	400/380, 3L/N/PE	400/380, 3L/N/PE	400/380, 3L/N/PE	400/380, 3L/N/PE	400/380, 3L/N/PE	400/380, 3L/N/PE
Max input power[VA]	8000	10000	12000	16000	20000	24000	30000
Max. input current[A]	12.2	15.2	18.2	24.3	30.3	36.4	45.5
AC Output (Backup)							
Rated output voltage[V]	400/380	400/380	400/380	400/380	400/380	400/380	400/380
Rated output frequency[Hz]	50/60	50/60	50/60	50/60	50/60	50/60	50/60
Rated output power[VA]	4000VA	5000VA	6000VA	8000VA	10000VA	12000VA	15000VA
Max. output current[A]	6.1	7.6	9.1	12.1	15.2	18.2	22.7

4.Technical data

THDv	3%	3%	3%	3%	3%	3%	3%
Switch time(ms)	<10	<10	<10	<10	<10	<10	<10
Battery Parameters							
Battery type	Lithium	Lithium	Lithium	Lithium	Lithium	Lithium	Lithium
Voltage range[v]	160-700	160-700	160-700	160-700	160-700	160-700	160-700
Max. charge/discharge power[W]	4000/4000	5000/5000	6000/6000	8000/8000	10000/10000	12000/12000	15000/15000
Max. charge/discharge current[A]	30/30	30/30	30/30	30/30	30/30	30/30	30/30
Efficiency							
MPPT efficiency	99.90%	99.90%	99.90%	99.90%	99.90%	99.90%	99.90%
Max. efficiency	97.90%	97.90%	98.00%	98.20%	98.20%	98.40%	98.40%
European efficiency	96.80%	96.80%	96.90%	97.10%	97.20%	97.40%	97.40%
Protection							
Input reverse connection protection	Integrated						
Anti-island protection	Integrated						
Residual current detection	Integrated						
AC short-circuit protection	Integrated						
AC over-current protection	Integrated						
AC over-voltage protection	Integrated						
Over-temperature protection	Integrated						
Overload protection	Integrated						
Others							
Operating temperature range[℃]	-25~60	-25~60	-25~60	-25~60	-25~60	-25~60	-25~60
Operating altitude[m]	<3000	<3000	<3000	<3000	<3000	<3000	<3000
Protection degree	IP66	IP66	IP66	IP66	IP66	IP66	IP66
Topology	transformerless	transformerless	transformerless	transformerless	transformerless	transformerless	transformerless
Parallel mode	integrated	integrated	integrated	integrated	integrated	integrated	integrated
Communication	WIFI/RS485/ CAN(BMS)	WIFI/RS485/ CAN(BMS)	WIFI/RS485/ CAN(BMS)	WIFI/RS485/ CAN(BMS)	WIFI/RS485/ CAN(BMS)	WIFI/RS485/ CAN(BMS)	WIFI/RS485/ CAN(BMS)
Display	LCD	LCD	LCD	LCD	LCD	LCD	LCD
Cooling method	Natural	Natural	Natural	Natural	Natural	Fan	Fan
Size[mm]	520*400*230	520*400*230	520*400*230	520*400*230	520*400*230	520*400*230	520*400*230
Weight[kg]	28	28	28	28	28	28	28
Standard	VDE AR N 4105, CEI0-21						

5.Installation

5.1 Unpacking

Check the integrity of the equipment and accessories. If you have any questions, please contact us.

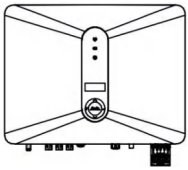 ①	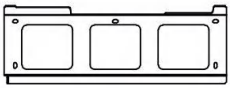 ②	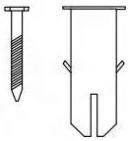 ③
④	⑤	⑥
⑦	⑧	⑨
⑩	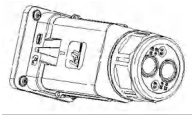 ⑪	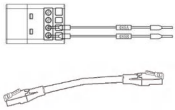 ⑫
⑬	⑭	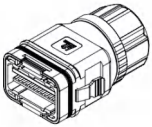 ⑮

5.Installation

Number	Quantity	Description
①	1	Austa-inverter
②	1	Bracket
③	5	Expansion tubes& Expansion screws
④	2	Battery Connectors (1* positive, 1*negative)
⑤	6	12-15K PV Connectors (3* positive, 3*negative) 4-10K PV Connectors (2* positive, 2*negative)
⑥	6	12-15K PV Pin contact (3* positive, 3* negative) 4-10K PV Pin contact (2* positive, 2* negative)
⑦	2	M5 Screw
⑧	2	Earth Terminal
⑨	1	Meter
⑩	1	WIFI module
⑪	1	Power connector
⑫	1	Meter adapter cable/Cable
⑬	1	User Manual
⑭	1	Quality Certificate/ Warranty card
⑮	1	Communication line end connector

5.2 Location

The Austa series products have an IP66 shell, suitable for indoor and outdoor use. When selecting the installation location of the inverter, the following points should be noted:

① The inverter should be installed in a well-ventilated environment.
② Do not install the inverter on any flammable items.
③ The wall where the inverter is installed should be able to withstand the weight of the inverter,and the slope of the wall should be within ± 5 °.

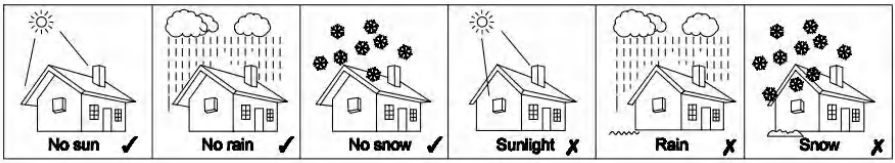

④ Do not expose the inverter directly to strong sunlight to prevent excessive temperature operation. The inverter should be installed in a place with shelter to prevent direct exposure to sunlight and rain.
⑤ Install the inverter at eye level for easy inspection of screen data and further maintenance.
⑥ The ambient temperature of the inverter installation location should be between -25°C and 60°C.
⑦ The surface temperature of the inverter may reach up to 75°C. To avoid risk of burns, do not touch the inverter while it's operating and inverter must be installed out of reaching of children.
⑧ The inverter is installed between 0-3000 meters above sea level.
⑨ The humidity range for inverter operation is 0%~100%RH.

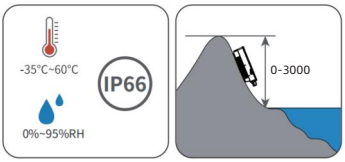

5.3 Installation Spacing

To ensure sufficient heat dissipation space, it is essential to reserve sufficient space around the inverter.

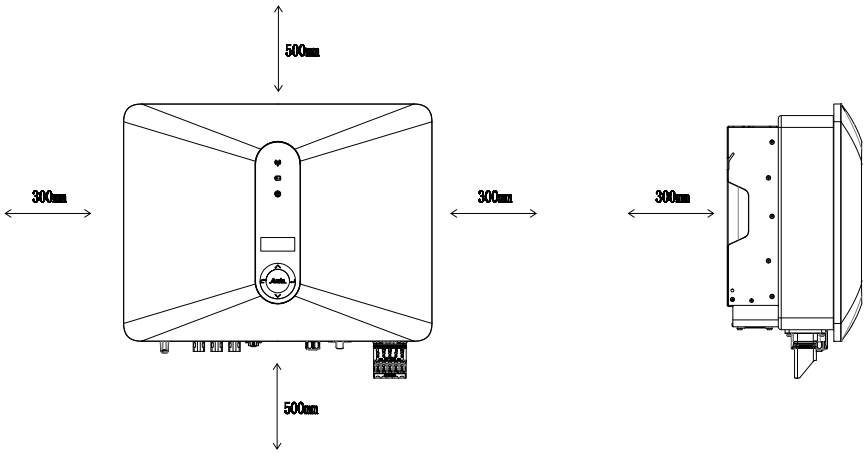

5.4 Installation Angle

The inverter must be installed vertically. Do not install the inverter horizontally, or tilt it forward or backward or upside down.

5.Installation

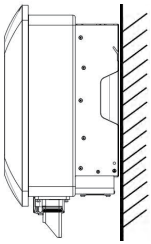

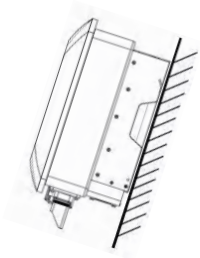

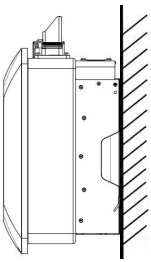

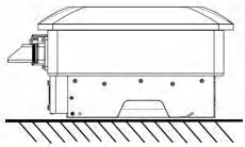

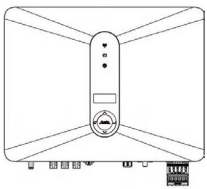

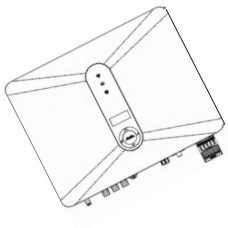

5.5 Mounting the Inverter

5.5.1 install the wall bracket

Dimensions of wall bracket (mm)

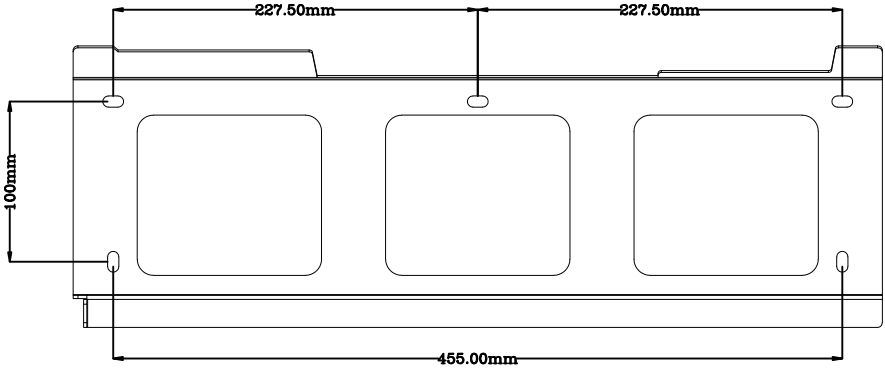

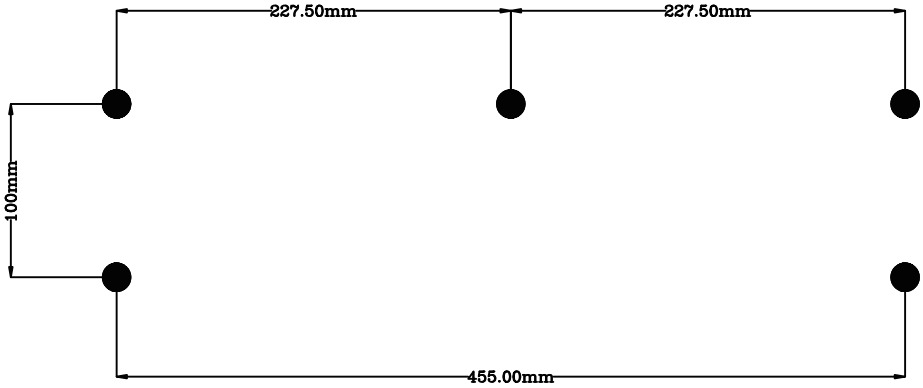

5.5.2 installing the bracket

1.Use the wall bracket as the template to mark the position of 5 holes on the wall.

2.Use an electrical driller with 10mm diameter bit to drill 5 holes in the wall with 55mm depth.

3.Insert the expansion tubes into the holes and tighten them, then fix the bracket onto the wall with expansion screws by using a cross screwdriver.

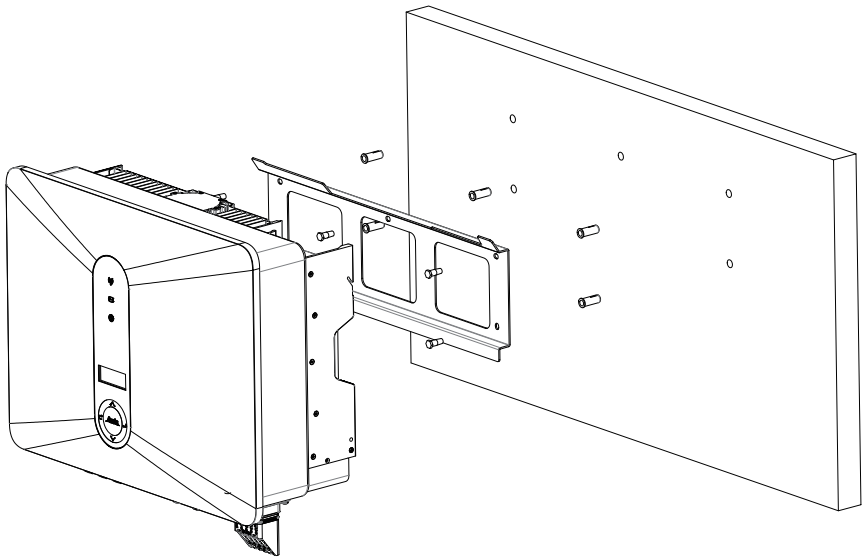

5.5.3 Mounting the Inverter

Lift the inverter and carefully hang the rear card slot on the fixed wall bracket, using M5 screws to secure it.

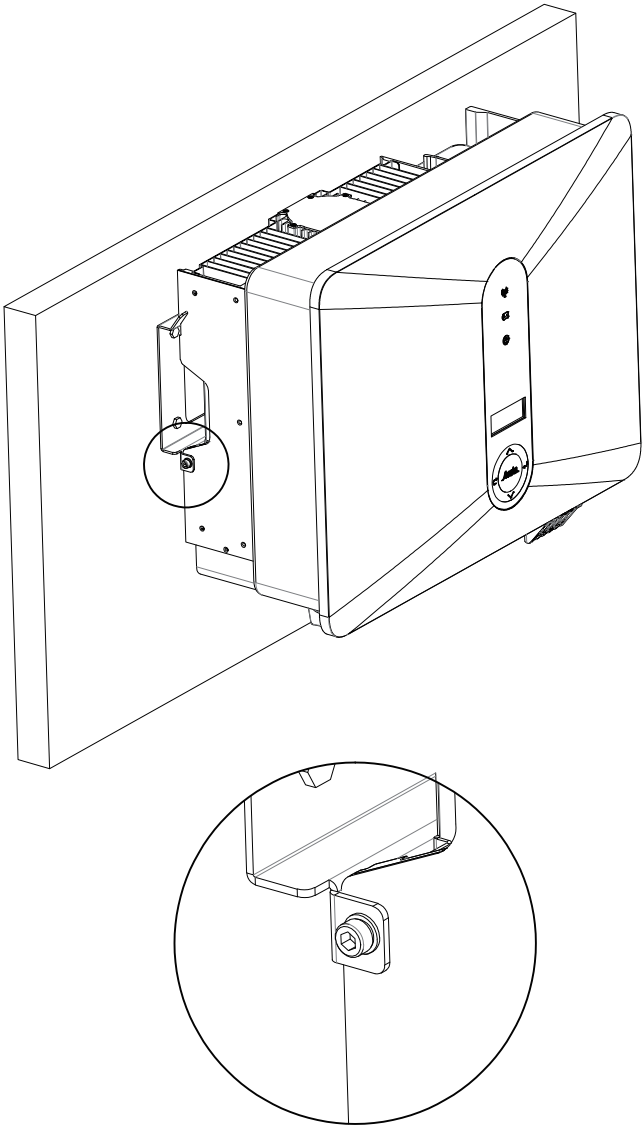

5.6 External Ground Connection

Connect the inverter and grounding through a PE line to achieve the purpose of grounding protection, please remember to connect the PE wire before connecting other wires.

⚠	**DANGER!** Do not connect the N wire as a protective ground wire to the inverter casing. Otherwise, it may cause electric shock.
NOTICE	**NOTICE!** Reliable grounding is good for resisting surge voltage shock and improving EMI performance. Inverters must be well grounded.
NOTICE	**NOTICE!** Please use a 10AWG yellow green wire to connect to ground.

Ground terminal connection steps:

① The external grounding terminal is located in on the lower right side of the inverter.

② Fix the grounding terminal to the PE wire with a proper tool and lock the grounding terminal to the grounding hole in the lower right side of the inverter.

5.Installation

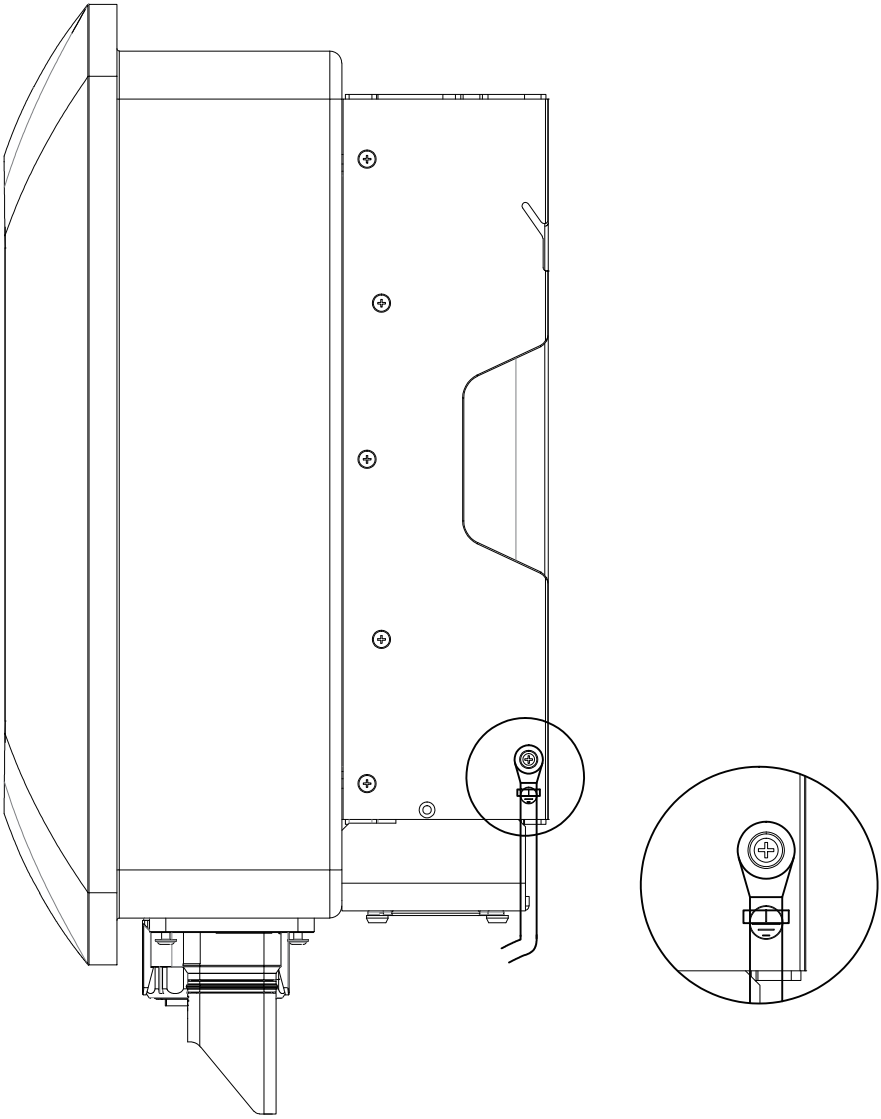

6.Electrical Connection

⚠	**DANGER!** High voltage in the conductive part of the inverter may cause injury. When installing the inverter, ensure complete power outage.Do not connect the N-wire as a protective grounding wire to the inverter bushing. It may cause electric shock.
⚠	**WARNING!** Please do not ground the positive or negative poles of the photovoltaic panel, otherwise it will cause serious damage to the inverter. WARNING:Static electricity may cause damage to the inverter. Anti static measures should be taken during installation and maintenance.
NOTICE	**NOTICE!** Do not use terminals other than those in the accessory packaging. Austa has the right to refuse any damage caused by mixed use of all terminals.
NOTICE	**NOTICE!** Moisture and dust can damage the inverter, ensuring that the cable gland is securely tightened during installation. If the inverter is damaged due to poor cable connector connection, the warranty claim will be invalid.

6.Electrical Connection

6.1 System Electrical Wiring Diagram

This is the wiring structure and composition of the Austa inverter, and the actual installation and wiring of the project must comply with local standards.

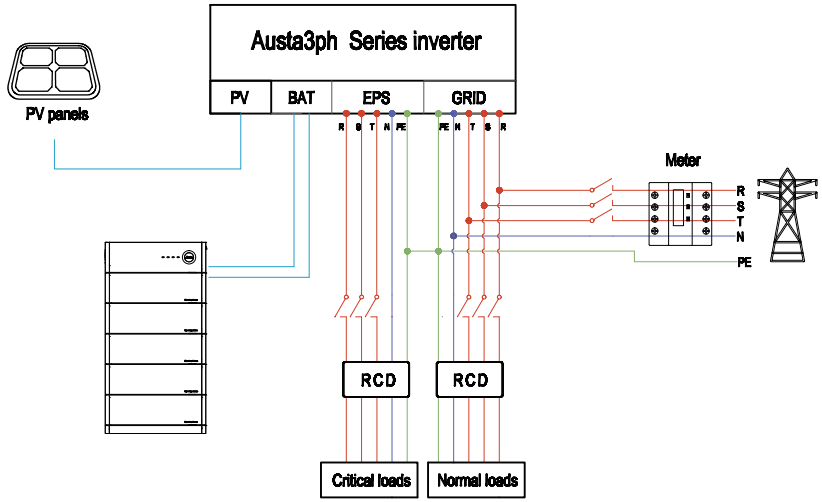

6.2 AC Output Connection

6.2.1 AC Side Requirements

NOTICE	**NOTICE!** 1.An independent AC circuit breaker is required on both the power grid and backup output sides, and the inverter should not be directly connected to the load at any time. 2.Please confirm that all DC & AC power sources are disconnected from the inverter before connecting the AC cables. 3.The Austa series three-phase high voltage hybrid inverter applies to the three-phase power grid with a voltage of 380/400V and a frequency of 50/60Hz. 4.Only after obtaining approval from the local power company can the inverter be connected to the power grid.

6.Electrical Connection

A three-phase AC circuit breaker needs to be installed on the AC side of the inverter. To ensure that the inverter can safely disconnect from the power grid in case of abnormalities, appropriate over current protection devices should be selected according to local distribution regulations and the maximum input (output) current on the AC side of the allowable wire diameter and cross sectional area of AC cables. It is recommended to install a circuit breaker with the overcurrent protection value of 50A on the AC side.

For AU4~15KETH are shown in the following:

Model	AU4KETH	AU5KETH	AU6KETH	AU8KETH	AU10KETH	AU12KETH	AU15KETH
Cable(Cu)	$4mm^2$	$4mm^2$	$4mm^2$	$4mm^2$	$4mm^2$	$6mm^2$	$6mm^2$

NOTICE	**NOTICE!** Make sure you select the correct specification cables for installation. Choose the specifications of AC circuit breakers based on the actual situation to avoid hazards caused by excessive current.

6.2.2 Residual Current Monitoring Device

With an integrated universal current-sensitive residual current monitoring unit included, the inverter will disconnect immediately from the mains power once a fault current with a value exceeding the limit is detected. However, if an external residual current device (RCD) is mandatory, the switch must be triggered at a residual current of 300 mA (recommended), or it can be set to other values according to local regulations. For example, in Australia, the inverter can use an additional 30mA (type A) RCD in installations.

6.Electrical Connection

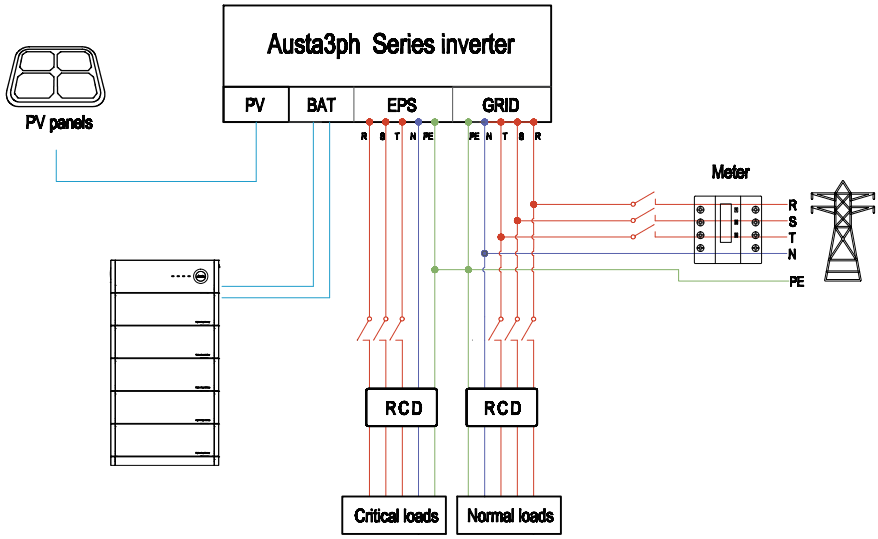

6.2.3 AC terminal installation instructions

⚠	**DANGER!** High voltage may be present in inverter! Ensure all cables are voltage-free before electrical connection.

① Dimension of stripping line

The dimensions of wire stripping are as follows:

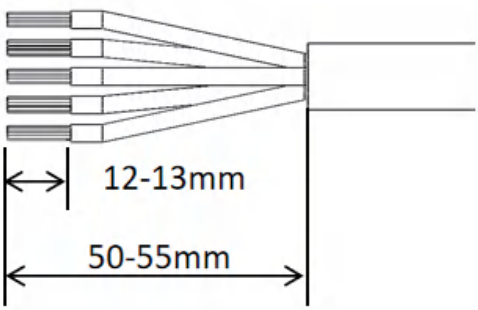

②Wiring Precautions

When wiring,Connect the back-up terminal first, and then the on-grid terminal.

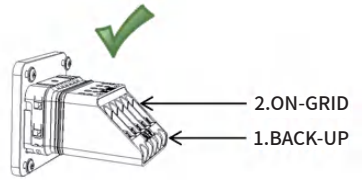

Installation steps:

① Remove the built-in wrench on the plastic;

② Thread the stripped wire into the lock nut and the main body in turn (the flexible wire needs to be riveted to the insulated terminal);

③ First insert the cable at the back-up end into the rubber core back-up end and observe the perspective hole. After the cable is in place, tighten the screw with a torque of 5±0.1N·m;

④ Then insert the core wire at the on-grid end into the on-grid end of the rubber core, observe the cable at the perspective hole in place, and tighten the screw with a torque of 5±0.1N·m;

⑤ Insert the main body into the rubber core and hear the "click" sound;

⑥ Tighten the nut with an open-ended wrench（torque 10.0±0.1N·m,Complete the installation.

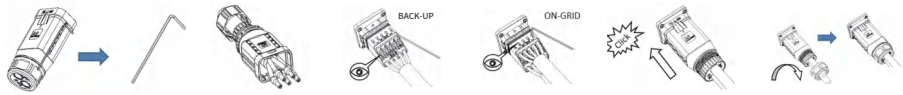

Disassembly steps:

① Turn the nut in the opposite direction.

② Press the unlocking position with the built-in wrench, hold the main body and pull it back to complete the disassembly.

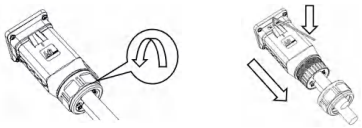

⚠	**WARNING!** The terminals must be locked tightly, and make sure it won’t be loose after a long period of use.

6.3 Battery Connection

High voltage batteries are an essential part of self use storage systems. The inverter provides the necessary interface for connecting the battery.

6.3.1 Battery Side Requirements

① A separate circuit breaker is required on the battery side, and the battery should not be directly connected to the inverter.

② Before connecting the battery cable, please confirm that all DC and AC power sources have been disconnected from the inverter.

③ Before making the battery connector, please make sure the polarity of the cable is correct.

④ Please contact your battery supplier for detailed battery installation information.

⚠	**WARNING!** Make sure you select the correct specification cables of installation. Otherwise the power will make the cable hot or burnt; it could result in death or serious injury.
⚠	**DANGER!** High voltage may be present in inverter! Ensure all cables are voltage-free before electrical connection.

6.3.2.Installing battery terminals

1.Prepare the tin-plated cables with a conductor cross section of 4 to 6 mm^2 (AWG10).

2.Strip 15mm off the conductor.

3.Open the spring using a screwdriver.

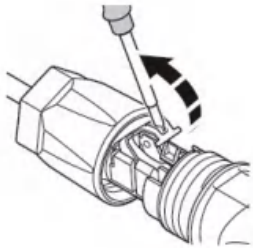

4.Carefully insert the stripped wire with stranded wire all the way into section A in the figure, and the end of the stranded wire in the spring must be visible.Close the spring and ensure that it engages in section B in the diagram.

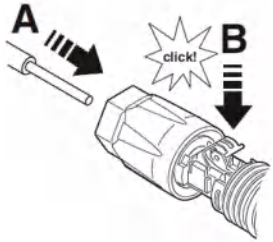

5. Push the insert into the sleeve, as shown in C in the figure.
6. Tighten the cable gland to 2 N·m, as shown in D in the following figure. Use a suitable and calibrated torque wrench with a size of 15. Use a No. 16 open jaw wrench to secure the connector in place.
7.Fit the two connectors together until the connection audibly locks into place.
8. Check to ensure the connector is secure.
9. Separating connectors
①Insert a screwdriver into one of the four openings, as shown in step A of the following figure.
②Leave the screwdriver in the opening. Pull apart the two connectors as shown in step B of the following figure.

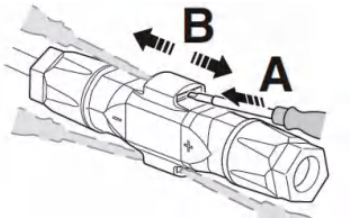

6.4 PV Wiring Connection

6.4.1 PV Side Requirements

NOTICE	**NOTICE!** According to local standards or regulatory requirements, it may be necessary to install external DC switches on the DC side of the PV system. The DC switch must be able to safely disconnect the PV. Install a DC switch on each photovoltaic panel to isolate the DC side of the inverter.

6.Electrical Connection

⚠	**DANGER!** High voltage may be present in inverter! Ensure all cables are voltage-free before electrical connection.
NOTICE	**NOTICE!** Ensure that the connected photovoltaic module signals and specifications are correct. Select the appropriate photovoltaic cable. Ensure correct DC polarity.

6.4.2 Installing PV terminals

① Turn off the DC switch.

② Prepare 2.5-4mm2 PV cable and PV plugs .

③ Strip 7mm of the conductor with stripping plier.

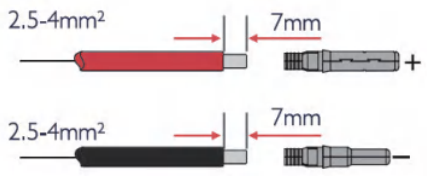

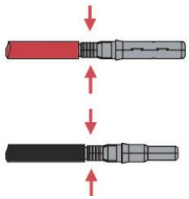

④ Insert the cable into the pin contacts and ensure that all wires are securely inserted.

⑤ Use crimping pliers to crimp the pin contacts and confirm that the pins are tightly pressed.

⑥ Insert the pin contact through the cable nut and assemble it onto the back of the male or female plug. When the card slot is stuck, it indicates that the connection is correct.

⑦ Tight the DC connector.

a.Slide the cable nut towards the back shell.

b.Rotate the cable nut to secure the cable.

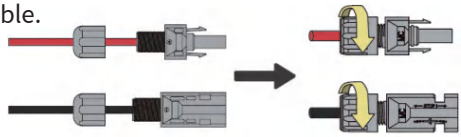

6.5 Communication connection

Austa series hybrid inverter also has a series of communication interfaces, dry contacts, and expansion ports, which can be used for human machine communication and can be transmitted to PC or other monitoring devices through these interfaces.

6.5.1 communication port

All communication ports are located in the multi-functional communication ports at the bottom of the inverter, including the meter port, WIFI port, BMS port, and DRM port.

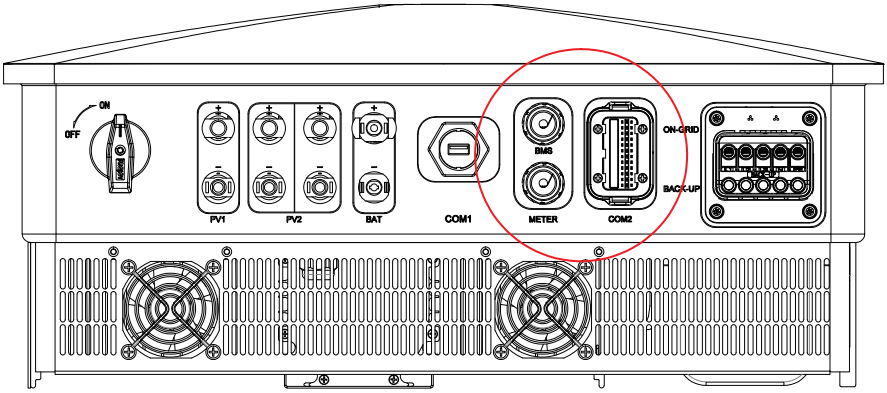

1.WIFI

Austa series hybrid inverter supports WIFI communication. Plug the WIFI module into the COM1 port in the bottom of inverter.

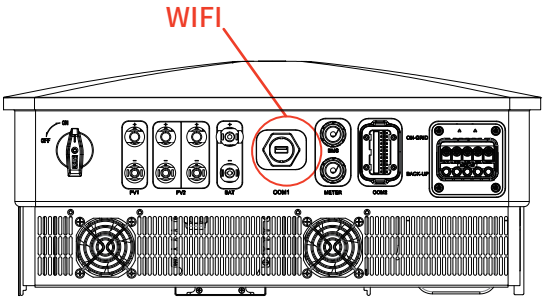

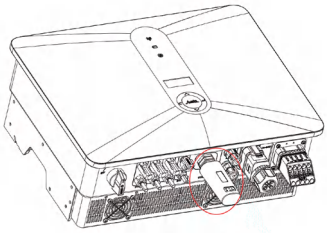

6.Electrical Connection

Connector installation:

① Take the network cable and pass it through the locking nut, sealing plug, and main body in sequence.,The sealing plug is clamped in from the side seam.

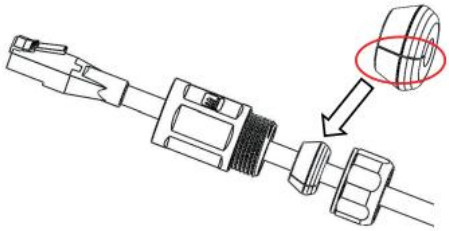

② Insert the network cable plug into the RJ45 board end connector.

③ Use a wrench to lock the main body onto the RJ45 board end connector.

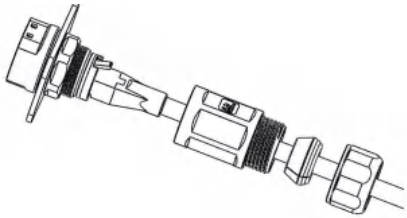

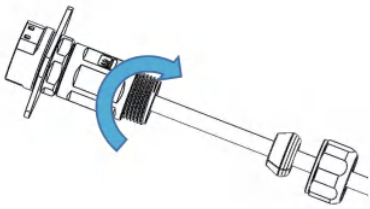

④ Install the sealing plug into the main body.

⑤ Use a wrench to lock the locking nut onto the main body.

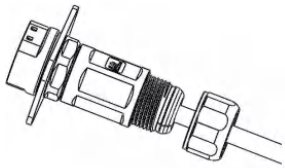

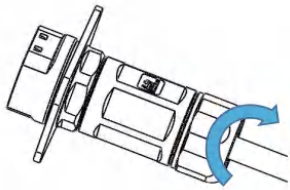

2.BMS

BMS PINS definition:

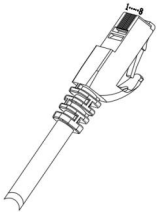

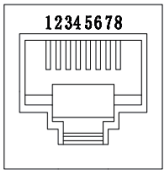

Pin	1	2	3	4	5	6	7	8
Function	NC	NC	NC	CANH	CANL	NC	NC	NC

BMS connection:

One end of the network cable is connected to the BMS interface at the bottom of the inverter, and the other end is connected to the IN/PCS interface of the battery.

Battery connection diagram：

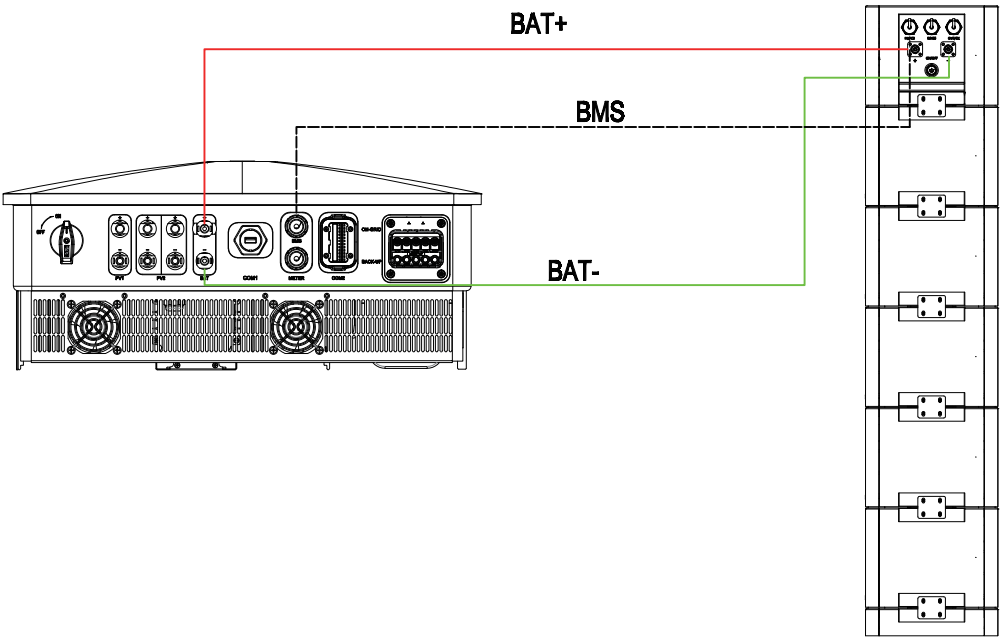

3.DRM

DRM PINS definition:

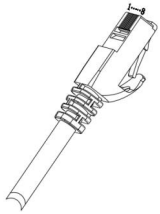

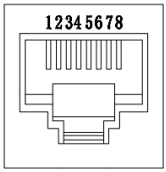

Pin	1	2	3	4	5	6	7	8
Function	DRM1/5	DRM2/6	DRM3/7	DRM4/8	3.3V	COM/DRM0	GND	GND

4. METER

Meter port PINS definition:

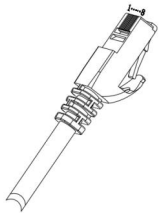

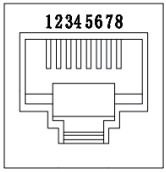

Pin	1	2	3	4	5	6	7	8
Function	485A	485B	NC	NC	NC	NC	NC	NC

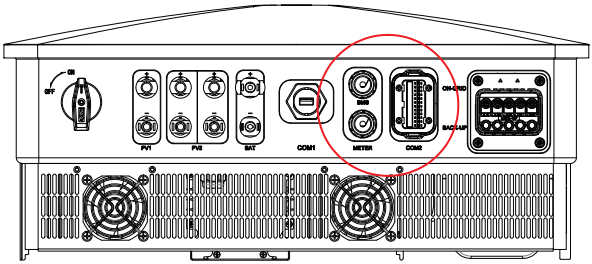

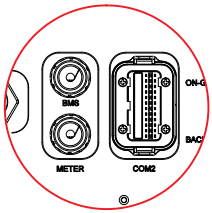

6.Electrical Connection

One end is connected to the electricity meter interface at the bottom of the inverter, and the other end is connected to the electricity meter 24 and 25 interfaces. 485A is connected to the 24 port, and 485B is connected to the 25port.

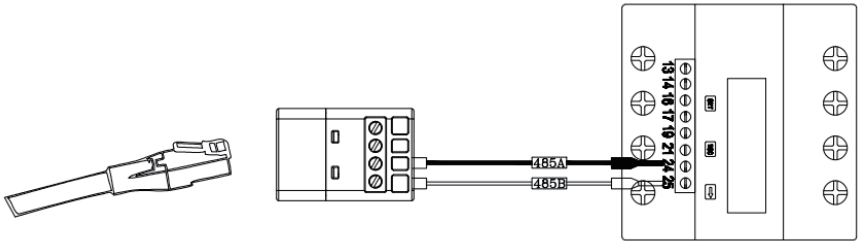

6.5.2 Communication line end connector

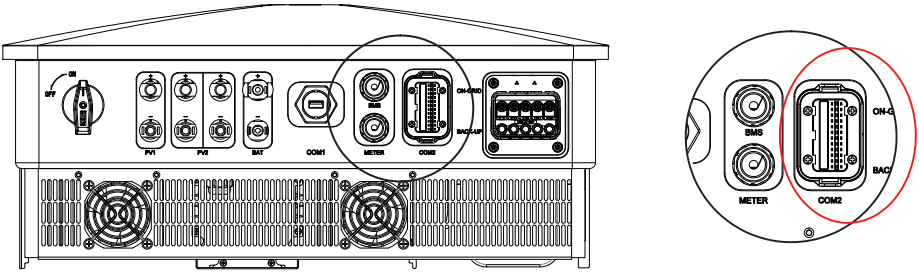

6.Electrical Connection

PINS definition:

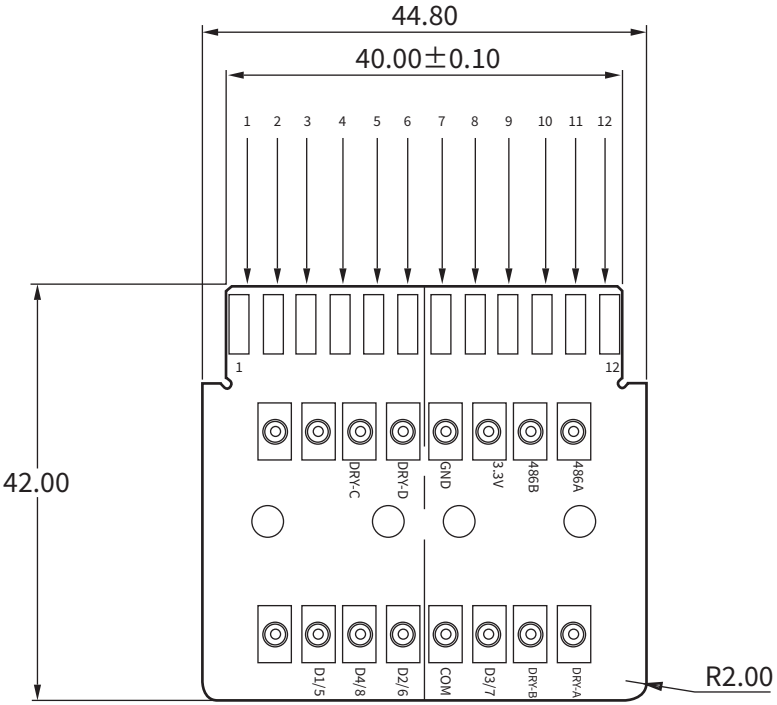

PIN	Definition	Function
1	NA	
2	NA	
3	DRYCONTACT_C	Generator Relay
4	DRYCONTACT_D	
5	GND	DRM interface
6	3.3V	
7	BMS_485B	Backup interface with 120 resistors
8	BMS_485A	
9	NA	
10	DRM1/5	DRM interface
11	DRM4/8	
12	DRM2/6	

6.Electrical Connection

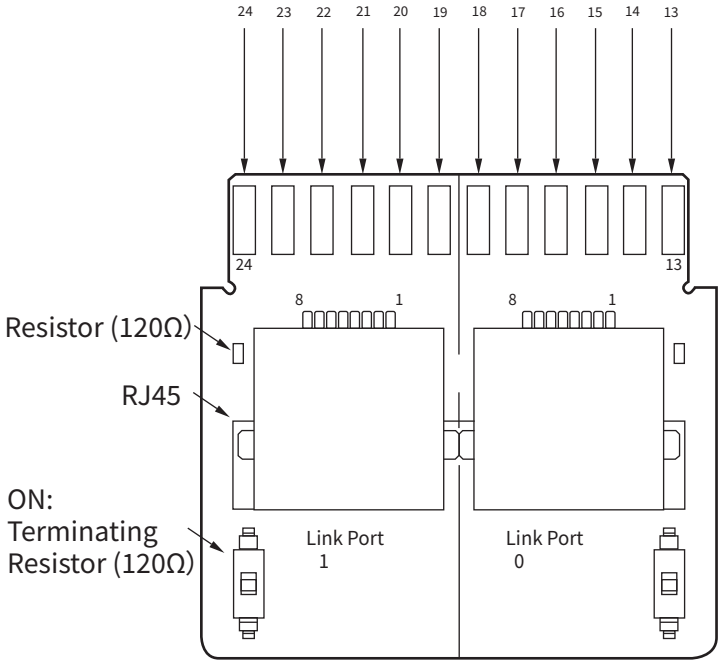

PIN	Definition	Function
13	COM/DRM0	DRM interface
14	DRM3/7	
15	DRYCONTACT_B	Parallel dry contact relay
16	DRYCONTACT_A	
17	NA	
18	PARALLEL_CANH	Parallel CAN interface with 120 resistors
19	NA	
20	PARALLEL_CANL	
21	NA	
22	NA	
23	NA	
24	NA	

6.Electrical Connection

Link Port0 And Link Port1
Meter port PINS definition:

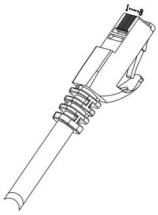

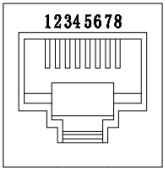

Pin	1	2	3	4	5	6	7	8
Function	485A	PARALLEL_CANH	NC	PARALLEL_CANL	NC	NC	NC	NC

*This connector reserves interfaces
① Insert the wire into the corresponding terminal.

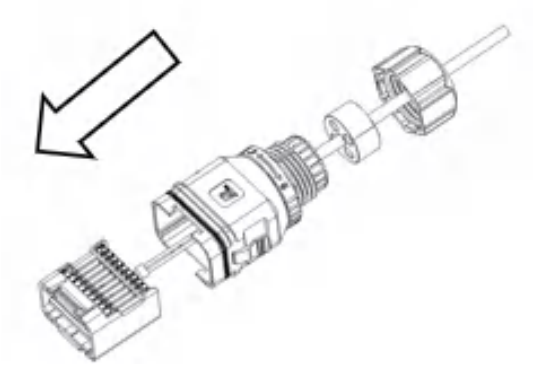

② Arrange the wire cores properly, and there should be no wire riding in the rubber core area. The rubber core should be installed in the main body and accompanied by a "click" sound, indicating that the installation position is correct.

6.Electrical Connection

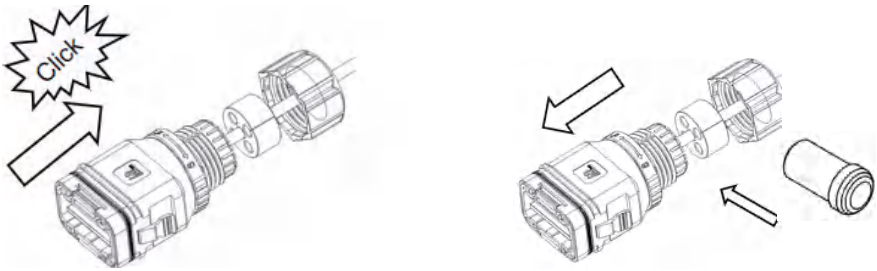

③ Install the plug into the main body and use a plug to plug the holes without wires installed.

④ Screw the locking nut onto the main body , complete the installation.

7.Fan Maintenance

NOTICE	**NOTICE!** Before maintenance, please stop the inverter and disconnect all power sources. Deadly voltage still exists in the inverter. Please wait at least 5 minutes before performing maintenance work. Only qualified electricians can maintain fans.

The fan inside the inverter is used to cool the inverter during operation. If the fan does not work properly, the inverter may not be able to cool, which may lead to a decrease in inverter efficiency. Therefore, it is necessary to regularly maintain the fan.

Maintenance steps：

① Turn off all power and wait for at least five minutes.

② Remove the screws from the fan module.

③ Disconnect the fan cable and then unplug the fan module for cleaning or replacement.

④ Reinstall the fan in reverse order.

7.Fan Maintenance

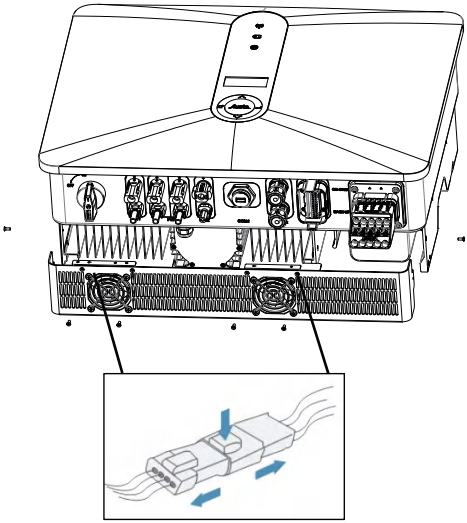

8.Operation method

8.1 Control panel

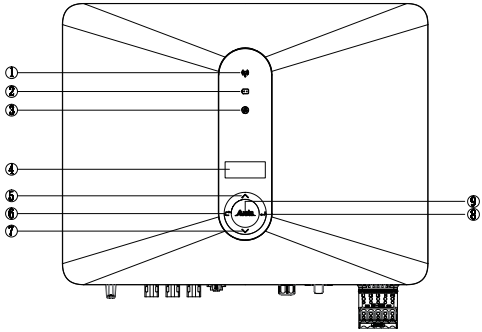

Object	Name	Description
①	Indicator LED	External communication status.
②		Battery communication ststus.
③		Grid-connected working state.
④	LCD Screen	Display the inverter parameter information.
⑤	Function Button	Up button: Move cursor to upside or increase value.
⑥		ESC button: Leave from current interface or function.
⑦		Down button: Move cursor to downside or decrease value.
⑧		OK button: Confirm the selection.
⑨	Status Indicator Light	Breathing light: Normal working status.
		Rapid flashing: Self-checking status.
		Red And Green flashing：Update Status.
		Slow blinking: Other status.
		Red light: Fault.

8.2 LCD function

Menu structure :

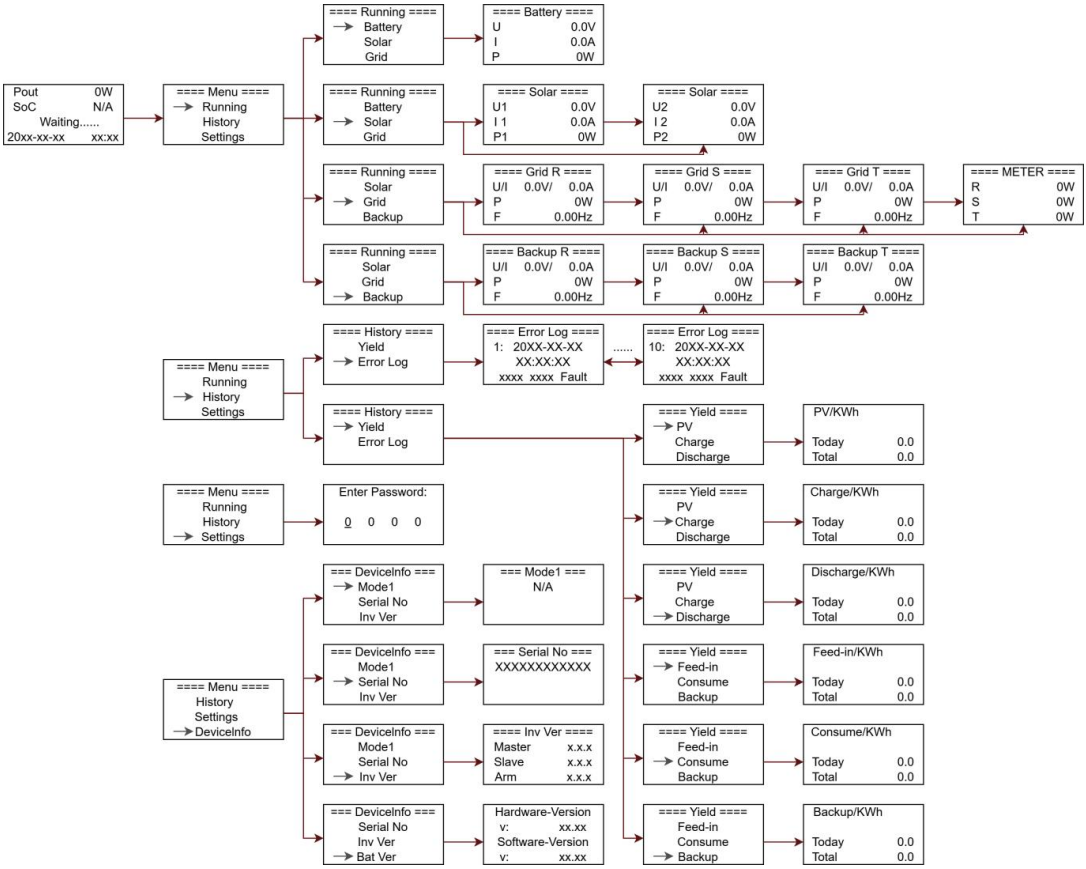

8.Operation method

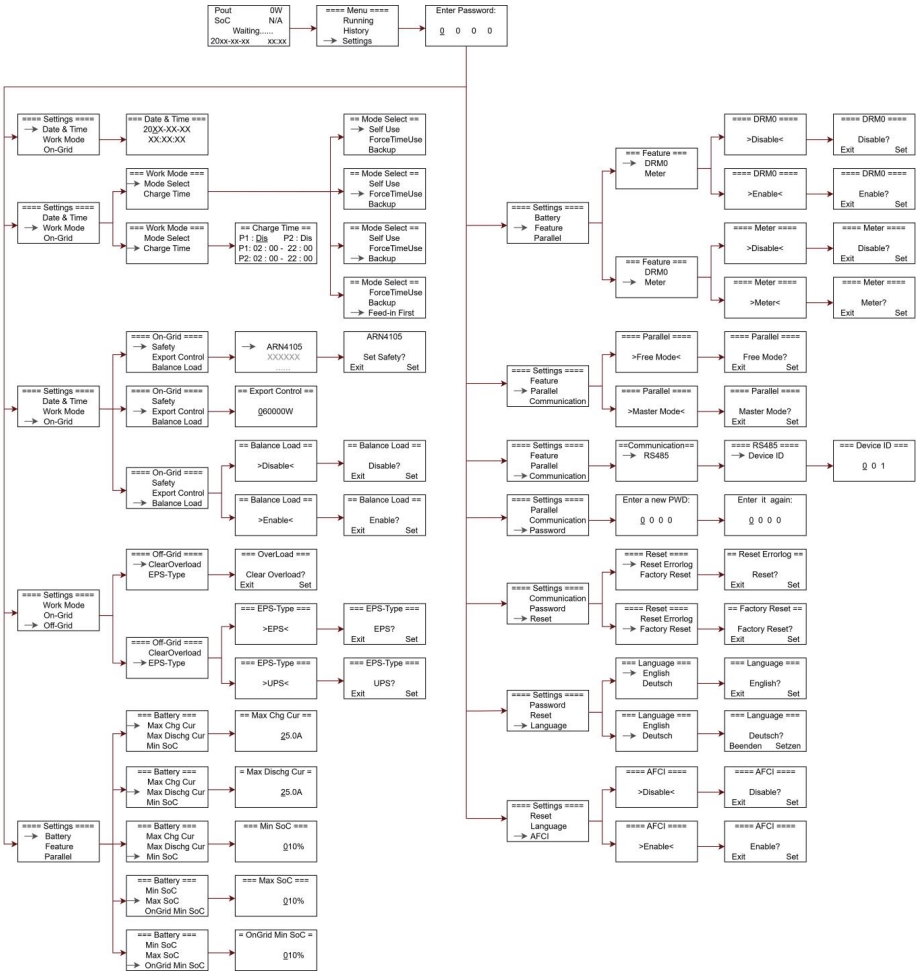

8.3 LCD operation

1. Main screen

The main screen as below. To access more information, please Press 'OK' to enter the menu.

2. Running

Press 'OK' to enter the menu, check the current running status, including Battery, solar, grid, backup.

8.Operation method

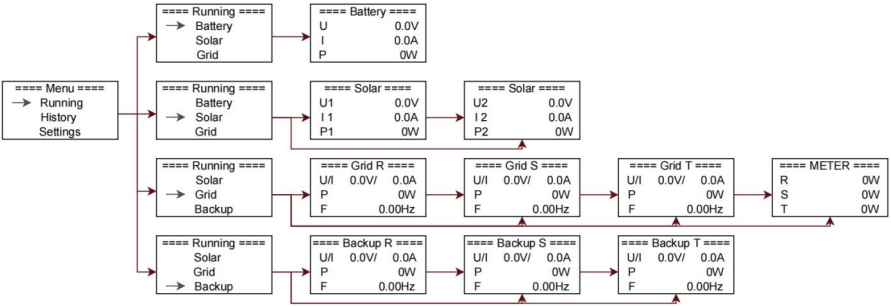

2.1) Battery

This status displays the battery usage of the system. Voltage, current and power of charge and discharge. "+" means charging; '-' means discharging.

Press 'ESC' to return to the status.

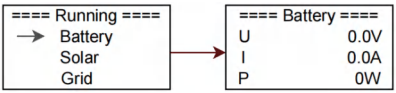

2.2) Solar

The display screen of the product is to display real-time input voltage, input current and power of each PV. Press 'ESC' to return to the menu.

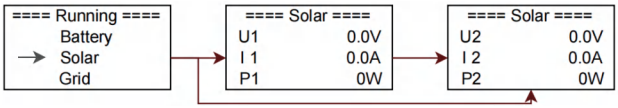

2.3) Grid

This status shows the real time grid parameters such as voltage, current, output power and frequency. Press up and down button to review the parameter. Press 'ESC' to return to the menu.

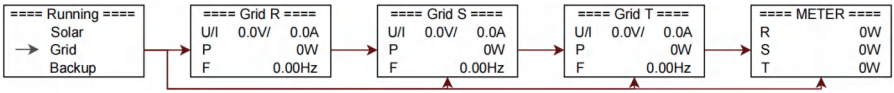

2.4) Backup

Backup will only have data when the inverter is working in Backup mode, it will show the real time data of the Backup output. As voltage , current , power, frequency. Press 'ESC' to return to the menu.

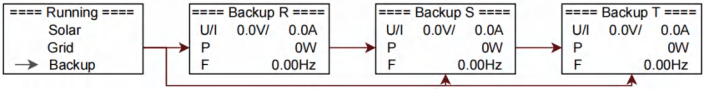

3. History

The history function contains two aspects of information: yield and error log. Press up and down to select, and review the data of the system.

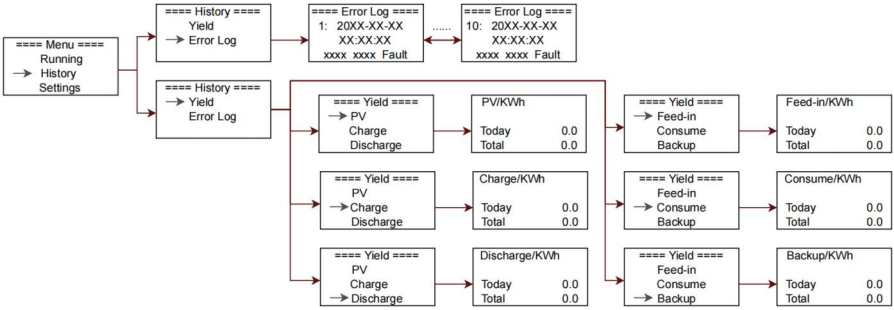

4. Settings

Setting function is used for set the inverter for language, date and time, work mode, communication address, advanced and so on.

4.1）Date Time

Press up or down button to change date and time. Press ‘OK’ to confirm.

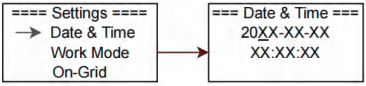

4.2）Work Mode

Press up or down button to select different work modes. Press ‘OK’ to confirm.

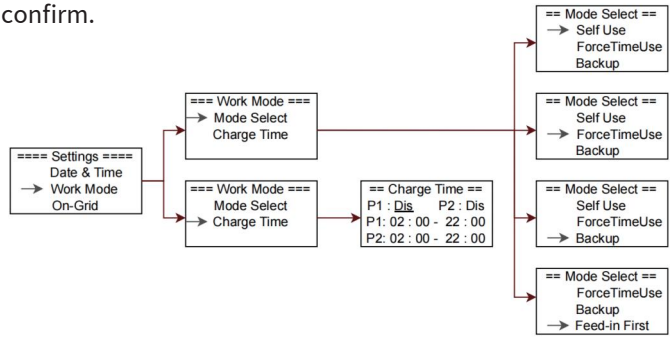

4.3）On-Grid

Press up or down button to set the grid functions. Press ‘OK’ to confirm

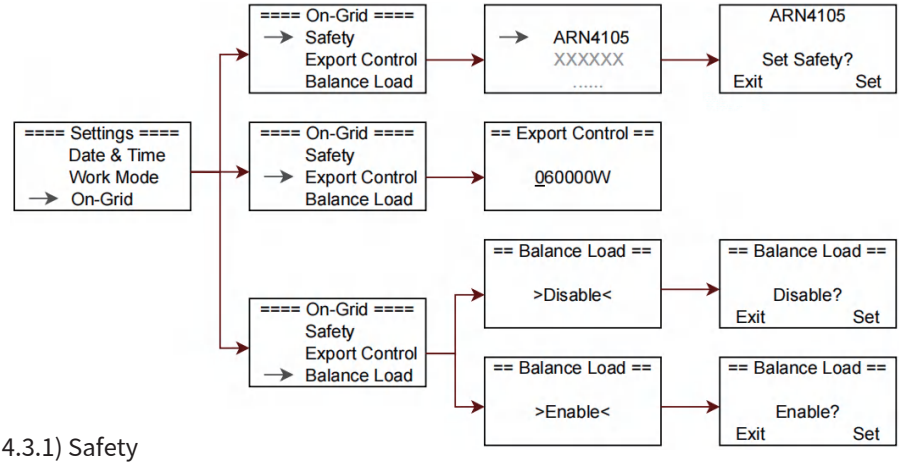

4.3.1) Safety

Press up or down button to change the grid code. Press ‘OK’ to confirm.

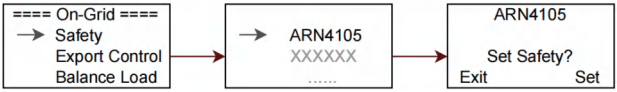

4.3.2) Export Control

With this function the inverter can control the energy export to the grid. Press up or down button to change the export power. Press ‘OK’ to confirm.

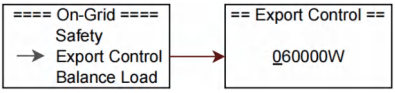

4.3.3）Balance Load

When the system is connected to a three-phase unbalanced load or a single phase load, customers can disable the balance load. The inverter can detect and identify the three-phase current imbalance in the system through the meter and output unbalanced power to different phases.

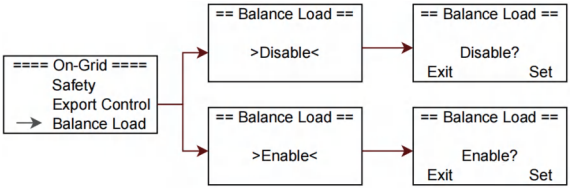

4.4）Off-Grid

To ensure system stability and reliability, you can effectively clear overloads and configure the power supply mode.Press 'OK' to confirm.

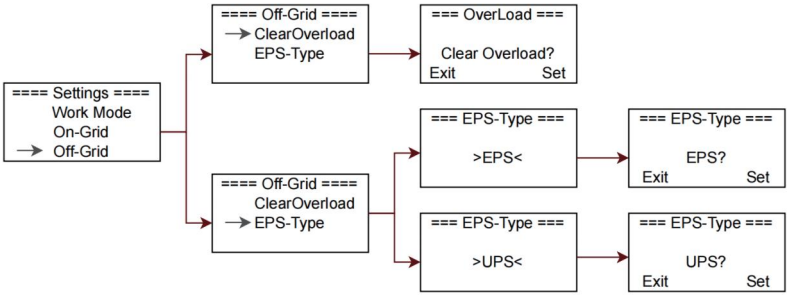

4.4.1）Clear Overload

Clearing overloads to restore the inverter to normal operating mode.Press 'OK' to confirm.

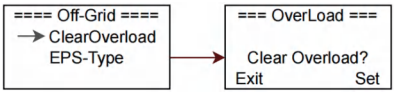

4.4.1） EPS-Type

The power supply setting can be selected from Emergency Power Supply (EPS) or Uninterruptible Power Supply (UPS).Press 'OK' to confirm.

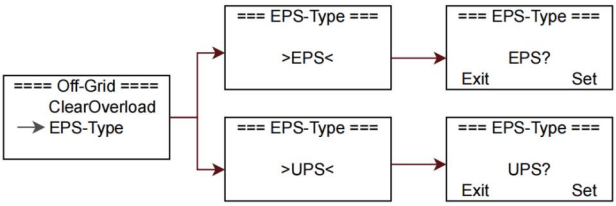

4.5）Battery

Press the up and down keys to set battery parameters. You can set the maximum and minimum charging and discharging currents of the battery, as well as the maximum and minimum battery capacity limits.

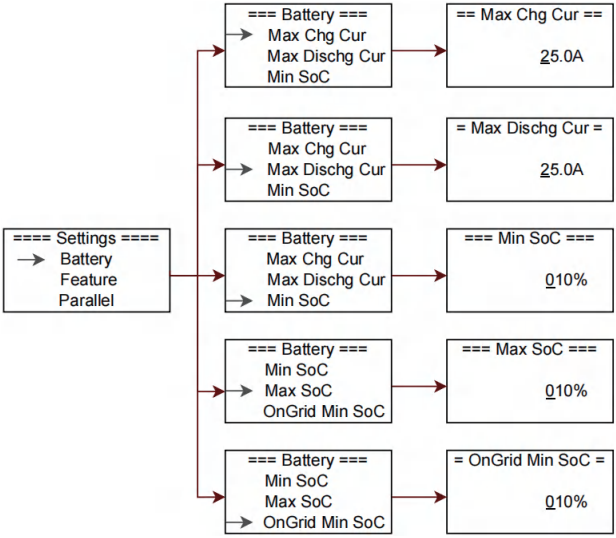

4.6) Feature

Press up or down button to enable or disable DRM0, and Meter. Press ‘OK’ to confirm.

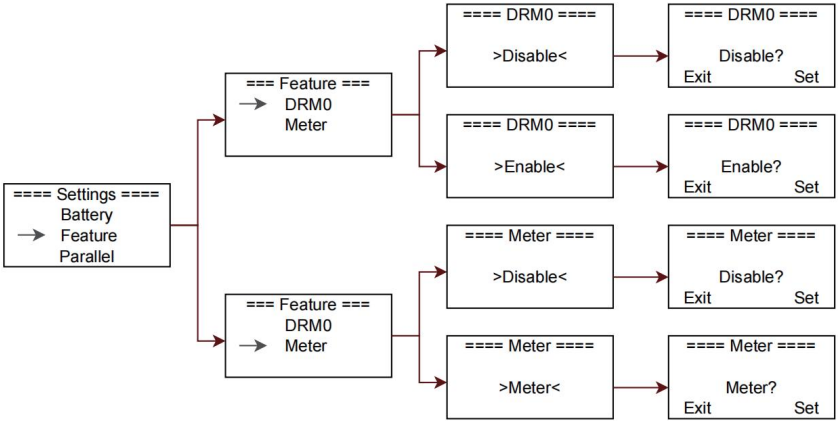

4.7) Parallel

The inverter can be set to Free Mode or Master Mode. Free Mode: single operation, disabling the Parallel function; Master Mode: the inverter is the Master, and other parallel inverters automatically switch to Slave.Press 'OK' to confirm.

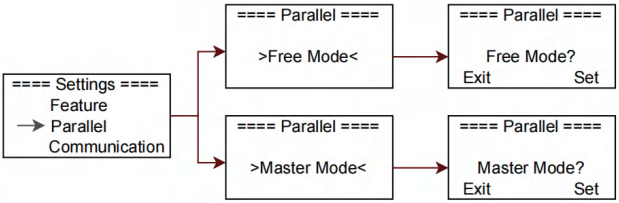

4.8) Communication

Press the up or down button to change the RS485 address. Press 'OK' to confirm.

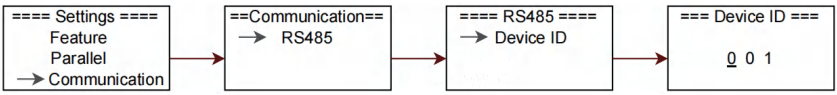

4.9) Password

Reset the new setting access password.

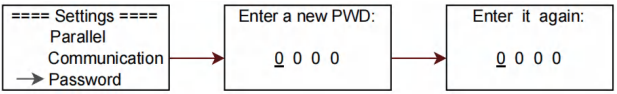

4.10) Reset

Press up or down button to reset energy, reset errors or factory reset. Press 'OK' to confirm.

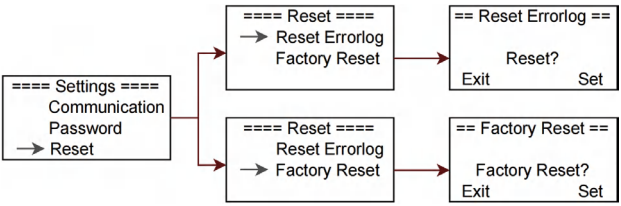

4.11) Language

Press up or down button to change language. Press 'OK' to confirm.

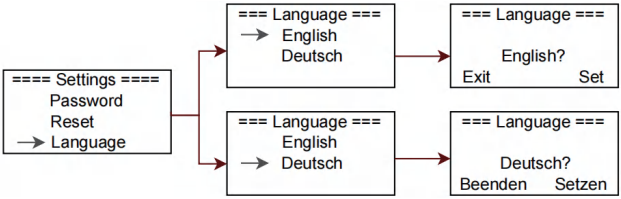

4.12) AFCI

Equipped with an optional arc fault circuit interrupter (AFCI) function, it provides an additional level of protection against electrical fires caused by arc faults.Press 'OK' to confirm.

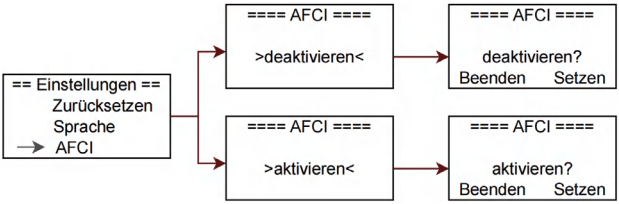

5. Device Info

This interface shows the information of the inverter, such as series number and software version.Press 'ESC' to return to the menu.

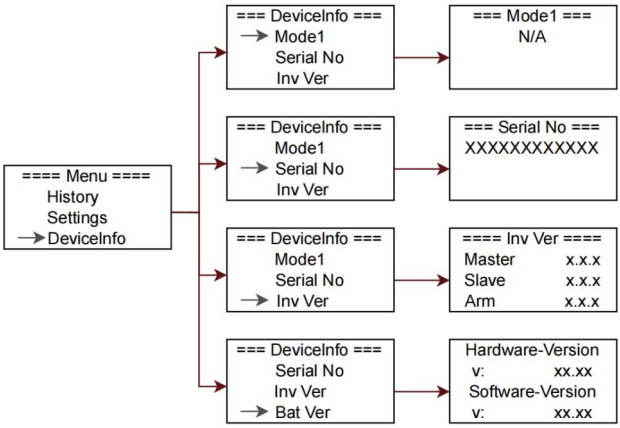

9.Troubleshooting

This section contains information and procedures for solving possible problems with the AU x KETH series inverters, and provides you with troubleshooting tips to identify and solve most problems that could occur with the AU x KETH series inverters.

This section will help you narrow down the source of any problems you may encounter. Please read the following troubleshooting steps.

· Check the warning or fault messages on the System Control Panel or Fault codes on the inverter information panel. If a message is displayed, record it before doing anything further.

· Attempt the solution indicated in the table below.

9.1 General fault table

Grid Voltage Lost	Grid voltage is zero 1. The alarm is automatically cleared after the power supply is restored. 2. Check whether the AC circuit or the AC switch is disconnected.
Grid voltage Fault	Grid voltage over rating or under rating. 1. If it occurs occasionally, it may be a short-term anomaly of the power grid, and the inverter will automatically restart and return to normal operation when it detects that the grid is normal, without the need for manual intervention. 2. If it frequently occurs, please check whether the grid voltage are within the allowable range according to local specifications. • If the grid voltage exceed the allowable range, please contact your local power operator. • If the grid voltage are within the allowable range, you will need to obtain approval from the local power operator before modifying the grid voltage.
Grid Frequency Fault	Grid frequency over rating or under rating. 1. If it occurs occasionally, it may be a short-term anomaly of the power grid, and the inverter will automatically restart and return to normal operation when it detects that the grid is normal, without the need for manual intervention. 2. If it frequently occurs, please check whether the grid voltage and frequency are within the allowable range according to local specifications. • If the grid voltage and frequency exceed the allowable range, please contact your local power operator. • If the grid voltage and frequency are within the allowable range, you will need to obtain approval from the local power operator before modifying the grid voltage.
Grid 10Mins Voltage Fault	Grid frequency over rating or under rating. 1. If it occurs occasionally, it may be a short-term anomaly of the power grid, and the inverter will automatically restart and return to normal operation when it detects that the grid is normal, without the need for manual intervention. 2. If it frequently occurs, please check whether the grid voltage and frequency are within the allowable range according to local specifications. • If the grid voltage and frequency exceed the allowable range, please contact your local power operator.

	• If the grid voltage and frequency are within the allowable range, you will need to obtain approval from the local power operator before modifying the grid voltage.
PLL Fault	PLL Fault. 1. If it occurs occasionally, it may be due to an abnormality caused by an external fault. When the fault disappears, the inverter will automatically restart and return to normal operation, without the need for manual intervention. 2. If it occurs frequently, please disconnect the AC terminal connection and check whether the three-phase grid connection is correct and whether the grid voltage and frequency are within the allowable range according to local specifications. • If the grid voltage and frequency exceed the allowable range, please contact your local power operator. • If the grid voltage and frequency are within the allowable range, please contact your dealer or after-sales service center.
Ac Sw OCP	Software detects high output current from AC terminal. 1. Please disconnect the PV, grid, and battery, then reconnect them, and wait for the inverter to return to normal. 2. If it cannot restore to normal, please contact your distributor or after-sales service center.
DCI OCP	DC component is out of limit in output current. 1. Please disconnect the PV, grid, and battery, then reconnect them, and wait for the inverter to return to normal. 2. If it cannot restore to normal, please contact your distributor or after-sales service center.
Hardware Trip	Hardware Trip. 1. Please disconnect the PV, grid, and battery, then reconnect them, and wait for the inverter to return to normal. 2. If it cannot restore to normal, please contact your distributor or after-sales service center.
Bus Voltage Fault	PV voltage is too high or BUS voltage sampling is abnormal. 1. Please disconnect the PV, grid, and battery, then reconnect them, and wait for the inverter to return to normal. 2. If it cannot restore to normal, please contact your distributor or after sales service center.
Battery Voltage Fault	Battery voltage is out of range. 1. Check if the battery input voltage is within the normal range. 2. If it cannot restore to normal, please contact your distributor or after sales service center.
Battery OCP	Battery current is high. 1. Please disconnect the battery, check if the battery connection is correct, reconnect it, and wait for the inverter to return to normal. 2. If it cannot restore to normal, please contact your distributor or after-sales service center.

9.Troubleshooting

ISO Fault	The isolation is failed. 1.Check whether the PGND cable of the inverter is correctly connected. 2. If it cannot restore to normal, please contact your distributor or after sales service center.
GFCI Fault	Ground leakage current exceeds the limitation. 1. If it occurs occasionally, it may be caused by an abnormality due to external cables. When the fault disappears, the inverter will automatically restart and return to normal operation, without requiring manual intervention. 2. If it cannot restore to normal, please contact your distributor or after sales service center.
Pv Voltage Fault	PV voltage out of range. 1. Check if the input voltage of the PV panel is within the range. 2. If the voltage is not within the range, please modify the photovoltaic array configuration by reducing or increasing the number of series connected photovoltaic panels in the strings.
PV OCP	High input current of the PV panel due to improper component configuration or component damage. 1. Please disconnect the PV, grid, and battery, then reconnect them, and wait for the inverter to return to normal. 2. If it cannot restore to normal, please contact your distributor or after sales service center.
Over Temp	The temperature inside the inverter cavity is abnormal. 1. Check the ventilation of the inverter installation location and whether the ambient temperature exceeds the maximum allowable working temperature range. 2. If the ventilation is poor or the ambient temperature is abnormal, improve the ventilation and heat dissipation situation. 3. If the ventilation and ambient temperature are both normal but the inverter cannot resume normal operation, please contact your dealer or after sales service center for assistance.
EPS Over Load	The Load added to the backup port exceeds the rated power. 1. Please check whether the power of the backup terminal load exceeds the limit. 2. After shutting down the load, you need to restart the machine or send the command "Clear Eps Over Load" on the APP. 3.If it cannot be restored to normal, please contact your dealer or after-sales service center for assistance.
Battery Power Low	The battery power is low. Please check whether the battery connection is correct. If it is correct, wait for the battery to charge.
EPS OCP	The backup side load current is too high. 1. Please disconnect the PV, grid, and battery, then reconnect them, and wait for the inverter to return to normal.

	2. If it cannot restore to normal, please contact your distributor or after sales service center.
Parallel Fault	The parallel machine fault. 1. Check whether the parallel machine is normal and the operation is correct. 2. If parallel operation cannot be achieved, disconnect the parallel operation and restore single machine operation.
Firmware Version Fault	1. Please disconnect the PV, grid, and battery, then reconnect them, and wait for the inverter to return to normal. 2. If it cannot restore to normal, please contact your distributor or after sales service center.
Master to Salve Fault	Communication between main cpu and slave is failing. 1. Please disconnect the PV, grid, and battery, then reconnect them, and wait for the inverter to return to normal. 2. If it cannot restore to normal, please contact your distributor or after sales service center.
Meter Lost Fault	Meter Lost Fault. 1. Check whether the meter connection is correct. 2. Inspect the meter for any damage. After reconnecting correctly, restart and wait for it to return to normal working condition. 3. If it cannot be restored to normal, please contact your distributor or after sales service center.
Bms Fault	Bms Fault. 1. Check the battery connection for correctness and the battery communication cable for any damage. 2. If it cannot be restored to normal, please contact your distributor or after sales service center.
ARM EEPROM Fault	ARM EEPROM Fault. 1. Please disconnect the PV, grid, and battery, then reconnect them, and wait for the inverter to return to normal. 2. If it cannot restore to normal, please contact your distributor or after sales service center.
DSP EEPROM Fault	DSP EEPROM Fault. 1. Please disconnect the PV, grid, and battery, then reconnect them, and wait for the inverter to return to normal. 2. If it cannot restore to normal, please contact your distributor or after sales service center.
ARM Flash Error Fault	ARM Flash Error Fault. 1. Please disconnect the PV, grid, and battery, then reconnect them, and wait for the inverter to return to normal. 2. If it cannot restore to normal, please contact your distributor or after sales service center.

ARM to DSP Fault	ARM to DSP Fault. 1. Please disconnect the PV, grid, and battery, then reconnect them, and wait for the inverter to return to normal. 2. If it cannot restore to normal, please contact your distributor or after sales service center.
ARM Flash Fault	ARM Flash Fault. 1. Please disconnect the PV, grid, and battery, then reconnect them, and wait for the inverter to return to normal. 2. If it cannot restore to normal, please contact your distributor or after sales service center.
Hct Device Fault	Hct Device Fault. 1. Please disconnect the PV, grid, and battery, then reconnect them, and wait for the inverter to return to normal. 2. If it cannot restore to normal, please contact your distributor or after sales service center.
Fan Fault	Fan Fault. 1. Please disconnect the PV, grid, and battery, then reconnect them, and wait for the inverter to return to normal. 2. If it cannot restore to normal, please contact your distributor or after sales service center.
Sample Inconsistency Fault	Sample Inconsistency Fault. 1. Please disconnect the PV, grid, and battery, then reconnect them, and wait for the inverter to return to normal. 2. If it cannot restore to normal, please contact your distributor or after sales service center.
Eps Relay Fault	Eps Relay Fault. 1. Please disconnect the PV, grid, and battery, then reconnect them, and wait for the inverter to return to normal. 2. If it cannot restore to normal, please contact your distributor or after sales service center.
Grid Relay Fault	Grid Relay Fault. 1. Please disconnect the PV, grid, and battery, then reconnect them, and wait for the inverter to return to normal. 2. If it cannot restore to normal, please contact your distributor or after sales service center.
System Fault	System Fault. 1. Please disconnect the PV, grid, and battery, then reconnect them, and wait for the inverter to return to normal. 2. If it cannot restore to normal, please contact your distributor or after sales service center.

ARM to DSP Fault	ARM to DSP Fault. 1. Please disconnect the PV, grid, and battery, then reconnect them, and wait for the inverter to return to normal. 2. If it cannot restore to normal, please contact your distributor or after sales service center.
ARM Flash Fault	ARM Flash Fault. 1. Please disconnect the PV, grid, and battery, then reconnect them, and wait for the inverter to return to normal. 2. If it cannot restore to normal, please contact your distributor or after sales service center.
Hct Device Fault	Hct Device Fault. 1. Please disconnect the PV, grid, and battery, then reconnect them, and wait for the inverter to return to normal. 2. If it cannot restore to normal, please contact your distributor or after sales service center.
Fan Fault	Fan Fault. 1. Please disconnect the PV, grid, and battery, then reconnect them, and wait for the inverter to return to normal. 2. If it cannot restore to normal, please contact your distributor or after sales service center.
Sample Inconsistency Fault	Sample Inconsistency Fault. 1. Please disconnect the PV, grid, and battery, then reconnect them, and wait for the inverter to return to normal. 2. If it cannot restore to normal, please contact your distributor or after sales service center.
Eps Relay Fault	Eps Relay Fault. 1. Please disconnect the PV, grid, and battery, then reconnect them, and wait for the inverter to return to normal. 2. If it cannot restore to normal, please contact your distributor or after sales service center.
Grid Relay Fault	Grid Relay Fault. 1. Please disconnect the PV, grid, and battery, then reconnect them, and wait for the inverter to return to normal. 2. If it cannot restore to normal, please contact your distributor or after sales service center.
System Fault	System Fault. 1. Please disconnect the PV, grid, and battery, then reconnect them, and wait for the inverter to return to normal. 2. If it cannot restore to normal, please contact your distributor or after sales service center.

9.Troubleshooting

Remark

If your inverter's information panel is not displaying a Fault light, check the following list to ensure proper operation of the unit in the current state of the installation:

· Is the inverter located in a clean, dry, and adequately ventilated place?
· Have the DC input breakers been opened?
· Are the cables adequately sized and short enough?
· Are the input and output connections and wiring in good condition?
· Are the configuration settings correct for your particular installation?
· Are the display panel and the communications cable properly connected and undamaged?

Contact Austa Customer Service for further assistance. Please be prepared to describe details of your system installation and provide the model and serial number of the unit.

10.Decommissioning

10.1 Dismantling the inverter

· Disconnect the inverter from DC input and AC output.
· Disconnect battery wiring.
· Wait for 10 minutes until the inverter is completely de-energized before operating.
· Disconnect communication and optional connection wiring.
· Remove the inverter from the bracket.

10.2 Packaging

If possible, please pack the inverter with the original packaging.

If it is no longer available, you can also use an equivalent carton that meets the following requirements.

· Suitable for loads more than 28kg.
· With handle.
· Can be fully closed.

10.3 Storage

Store the inverter in dry place where ambient temperatures are always between -25 °C ~ +60 °C.

Scan Here for Austa Solar App

ios

Android

service tel:400-607-3668
www.austasolar.net
marketing@osdasol.com
NINGBO AUSTA SOLAR TECH CO.,LTD

Search "Austa Solar"
on Google Play and App Store

Download on the App Store

GET IT ON Google Play