# POWER 1000 MINI

## User Manual

v1.0 2026.04

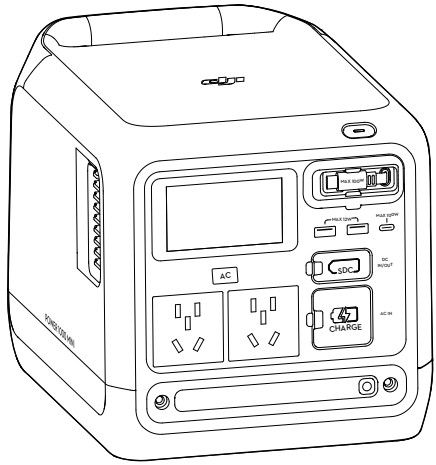

This document is copyrighted by DJI with all rights reserved. Unless otherwise authorized by DJI, you are not eligible to use or allow others to use the document or any part of the document by reproducing, transferring or selling the document. Only refer to this document and the content thereof as instructions to operate DJI products. The document should not be used for other purposes.

In the event of divergence among different versions, the English version shall prevail.

**Searching for Keywords**

Search for keywords such as “battery” and “install” to find a topic. If you are using Adobe Acrobat Reader to read this document, press Ctrl+F on Windows or Command+F on Mac to begin a search.

**Navigating to a Topic**

View a complete list of topics in the table of contents. Click on a topic to navigate to that section.

**Printing this Document**

This document supports high resolution printing.

 © 2026 DJI All Rights Reserved.

# Using this Manual

## Legend

⚠ Important　　Hints and Tips　　Reference

## Read Before Use

DJI™ provides you with tutorial videos and the following documents:

1. *Safety Guidelines*
2. *Quick Start Guide*
3. *User Manual*

It is recommended to watch all the tutorial videos and read the *Safety Guidelines* before using for the first time. Make sure to review the *Quick Start Guide* before using for the first time and refer to this *User Manual* for more information.

## Video Tutorials

Go to the address below or scan the QR code to watch the tutorial videos, which demonstrate how to use the product safely:

https://www.dji.com/power-1000-mini/video

## Download DJI Assistant 2

Download DJI ASSISTANT™ 2 (Power Series) at:

https://www.dji.com/downloads/softwares/dji-assistant-2-power-series

© 2026 DJI All Rights Reserved. 

# Contents


**Using this Manual** **3**
- Legend 3
- Read Before Use 3
- Video Tutorials 3
- Download DJI Assistant 2 3

**1 Product Profile** **5**
- 1.1 DJI Power 1000 Mini 5
- 1.2 Display Screen 6

**2 Basic Usage** **8**
- 2.1 Powering on/off 8
- 2.2 Connecting to the DJI Home App 8
- 2.3 AC Recharging 8
- 2.4 USB-C Recharging 10
- 2.5 AC Output 10
- 2.6 USB Output 11
- 2.7 Using the LED Light 12

**3 Accessories** **13**
- 3.1 SDC Output 13
- 3.2 Car Recharging 14
- 3.3 Solar Recharging 15

**4 Uninterruptible Power Supply (UPS)** **17**

**5 Appendix** **18**
- 5.1 Firmware Update 18
  - Using DJI Home App 18
  - Using DJI Assistant 2 (Power Series) 18
- 5.2 Log Export 19
- 5.3 Maintenance 19
- 5.4 Disposal 20
- 5.5 Specifications 20
- 5.6 Compatibility 20
- 5.7 Types of AC Output Ports 21


 © 2026 DJI All Rights Reserved.

# 1 Product Profile

## 1.1 DJI Power 1000 Mini

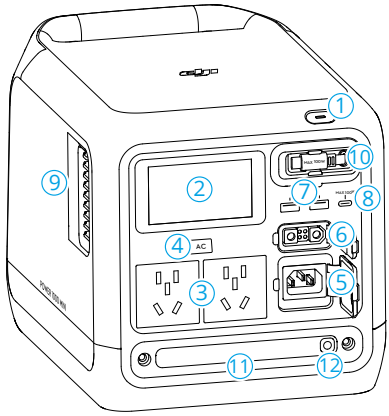


1. Power Button
2. Display Screen
3. AC Output Ports [1]
4. AC Button
5. AC Input Port
6. SDC Port
7. USB-A Port
8. USB-C Port
9. Vents
10. USB-C Retractable Cable
11. LED Light
12. LED Control Button

[1] The illustrations in the user manual may differ from the actual product, depending on the country or region. Please refer to the actual product. Go to Types of AC Output Ports section for more information.

© 2026 DJI All Rights Reserved. 

## 1.2 Display Screen

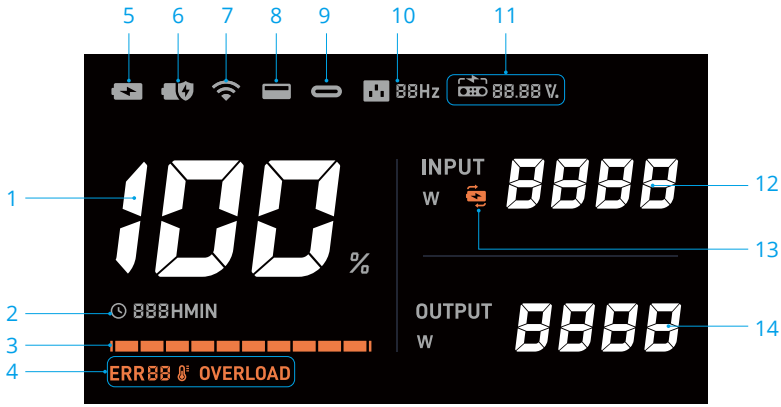


1. **Remaining Battery Level**
2. **Time**

   Displays the remaining usage time when the power station is charging external devices.

   Displays the remaining time required to recharge the power station to the recharging limit set in the DJI Home App from the current battery level.

   When the device has output and input at the same time, the display screen shows the required recharge time if the input power is larger, or the remaining usage time if the output power is larger.
3. **Battery Level Bar**

   The battery level bar blinks in sequence when recharging the power station.

   The last grid of the battery level bar blinks when the power station is charging external devices.
4. **System Warnings**

   ERR88 : Error code

   : Temperature error. The icon will be solid if the temperature is too high or too low. Wait for the temperature to return to normal.

   The icon will blink when the charging temperature is abnormal. In this case, the charging power will be reduced in Fast Recharge mode and it will take more time to fully charge the power station.

   OVERLOAD : Overload warning

 © 2026 DJI All Rights Reserved.

Check the warning prompts in DJI Home App or visit https://s.dji.com/DJI-Power to learn about the warning details and troubleshooting. Contact official support if the problem persists.

5. **Fast Recharge mode**
6. **Standard Recharge mode**
7. **Wi-Fi Connection Status**

   Solid icon indicates a successful Wi-Fi connection.

   Blinking icon indicates that the Wi-Fi is not connected or unavailable.
8. **USB-A Port**
9. **USB-C Port**
10. **AC Output Frequency**

    Make sure the operating frequency of the power station is consistent with the frequency of the input power grid. When the frequencies are inconsistent, the screen will display an AC input frequency error code (ERR13/14). In this case, the power station will operate with the following limitations:

    - When AC output is turned off, the power station can be charged but cannot supply power to external devices.
    - When AC output is turned on, the power station can supply power to external devices but cannot be charged.

    To restore normal use, remove the AC power cable and all the external devices connected to the AC output port. Then switch the AC frequency by pressing and holding the AC button for more than 10 seconds, or switch AC frequency in DJI Home App.
11. **SDC Port**

    : Recharging the power station or charging external devices.

    88.88 V : The voltage value when using the SDC Port.

    88.88 % : The battery level of the aircraft battery when charging the battery.
12. **Input Power**
13. **Uninterruptible Power Supply (UPS)**
14. **Output Power**

© 2026 DJI All Rights Reserved. 

# 2 Basic Usage

## 2.1 Powering on/off

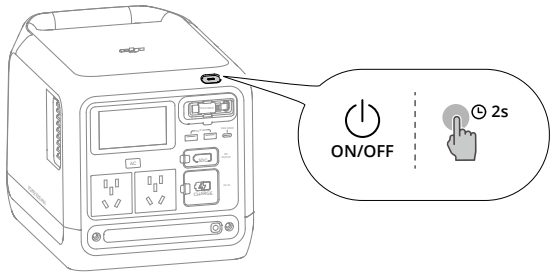


Power on/off: Press and hold the power button for at least two seconds.

Turn on/off the display screen: When the power station is powered on, press the power button once.

## 2.2 Connecting to the DJI Home App

1. Scan the QR code to download DJI Home App.

2. Enable Bluetooth and Wi-Fi on your phone, run DJI Home App and follow the instructions to connect the device.

- To check the Android and iOS operating system versions supported by the app, visit https://www.dji.com/downloads/djiapp/dji-home.
- The interface and functions of the app may vary as the software version is updated. Actual user experience is based on the software version used.

## 2.3 AC Recharging

Open the port cover and connect the AC input port to an AC power outlet.

The power station supports the following recharge modes:

 © 2026 DJI All Rights Reserved.

**Fast Recharge mode**: The recharge power is larger and is suitable for daily recharge.

**Standard Recharge mode**: The recharge power is smaller, and the operation noise is lower, which is suitable for recharging at night.

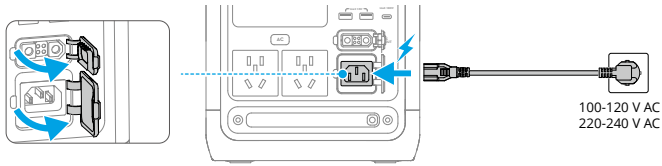


- The power station will be recharged in Fast Recharge mode by default. The settings can be modified in DJI Home App.

- Use the included AC power cable for recharging and avoid bending or pressing the cable. Ensure good ventilation during recharging. DO NOT place the device in high-temperature or confined space.
- Disconnect the AC power outlet when charging is complete.
- It is recommended to use Standard Recharge mode for an extended battery cell life.
- After six consecutive Fast Recharge cycles, the power station will automatically enter a maintenance recharge during the next charging cycle. At that time, the recharging limit set in the DJI Home App will be temporarily disabled, and the power station will be fully charged to 100%. It is recommended to continue using the power station only after the maintenance charge is complete.
- When the temperature is abnormal in Fast Recharge mode, the temperature error icon on the display screen blinks slowly and the actual recharge power may be lowered to ensure the battery cell life and safety.
- Make sure the operating frequency of the power station is consistent with the frequency of the input power grid. When the frequencies are inconsistent, the screen will display an AC input frequency error code (ERR13/14). In this case, the power station will operate with the following limitations:
  - When AC output is turned off, the power station can be charged but cannot supply power to external devices.
  - When AC output is turned on, the power station can supply power to external devices but cannot be charged.

  To restore normal use, remove the AC power cable and all the external devices connected to the AC output port. Then switch the AC frequency by pressing and holding the AC button for more than 10 seconds, or switch AC frequency in DJI Home App.

© 2026 DJI All Rights Reserved. 

## 2.4 USB-C Recharging

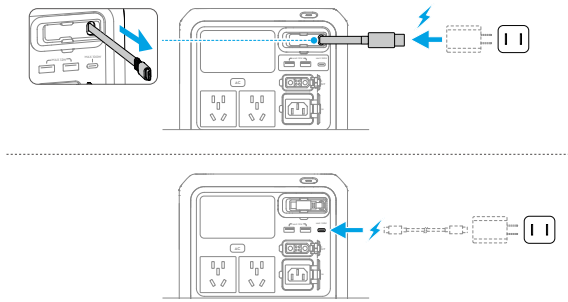

It is recommended to use with chargers and charging cables that support PD 3.0 protocols or above.

The power station may enter an undervoltage protection state if the battery is completely drained. In this case, recharging via USB-C or SDC will be unavailable. It is recommended to connect the AC power cable to recharge and wake up the power station. If the power station still cannot be woken up after connecting the AC power cable, contact official technical support. Once charging is restored, refer to the "Maintenance" section for long-term storage instructions.

## 2.5 AC Output

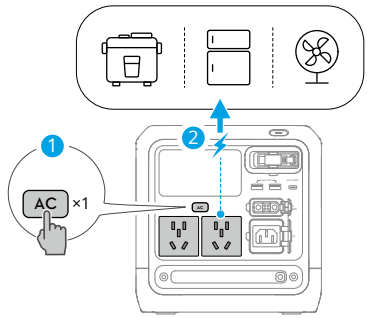


Connect the external device to an AC output port and press the AC button for AC power supply. The power station will beep once and the AC button will blink slowly.

 © 2026 DJI All Rights Reserved.

AC output will automatically shut down if the power station is not powering any AC device for more than 30 minutes. When AC output is disabled, the power station will automatically shut down if it has no output or input for more than 60 minutes. The AC Timeout and the Device Timeout can be modified in DJI Home App.

Press and hold the AC button for a continuous AC power supply when connecting the power station to devices that operates intermittently such as a refrigerator. The power station will beep once and the AC button will show solid light.

The internal electronic components have a waterproof coating. There may be a faint smell when using a large amount of power. The smell will dissipate naturally with daily use.

## 2.6 USB Output

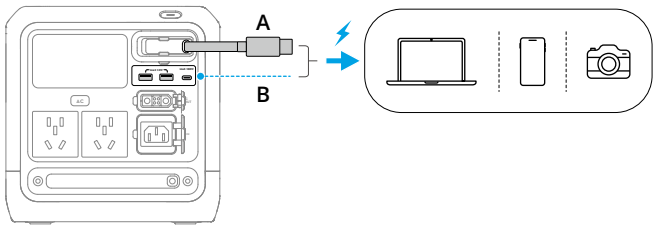


- When multiple USB outputs are used simultaneously, the total output power will be limited. Visit https://www.dji.com/power-1000-mini/specs for more information.
- DO NOT knot, twist, or sharply bend the retractable cable to avoid damaging the cable. The retractable cable can be replaced by the user. Refer to the tutorial video for detailed replacement instructions.

© 2026 DJI All Rights Reserved. 

## 2.7 Using the LED Light

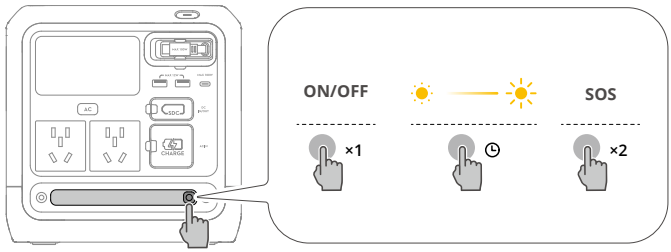


Press once: Turn the light on or off.

Press and hold: Adjust the brightness. Release to keep the current brightness.

Double press: Switch to SOS flashing mode.

LED light control is also supported in DJI Home App.

 © 2026 DJI All Rights Reserved.

# 3 Accessories

It is recommended to click the link below or scan the QR code to watch the tutorial video for installation and usage methods.

https://www.dji.com/power-1000-mini/video

⚠ Unless otherwise specified, the accessories need to be purchased separately.

## 3.1 SDC Output

The power station can be used with SDC cables to charge different devices via the SDC port.

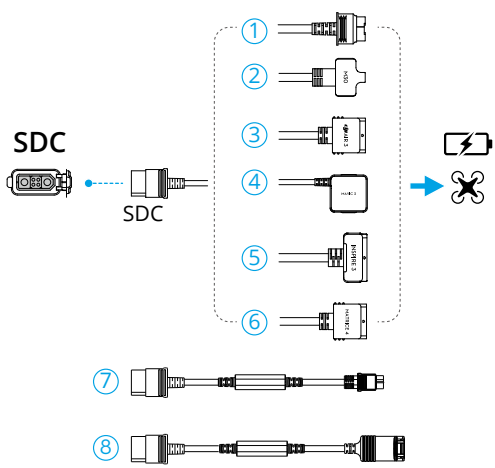


1. Fast Charge Cable for Drones [1]
2. Matrice 30 Series Fast Charge Cable
3. Air 3 Series Fast Charging Cable
4. Mavic 3 Series Fast Charge Cable

© 2026 DJI All Rights Reserved. 

5. Inspire 3 Fast Charge Cable
6. Matrice 4 Series Fast Charge Cable
7. SDC to XT60 Power Cable [2]
8. SDC to Car Charger Plug Power Cable [2]

[1] When using the fast charge cable with DJI Mavic 4 Pro Parallel Charging Hub, connect to the power station first, and then to the charging hub. If you connect to the charging hub first, press the Function Button once on the charging hub to start charging.

[2] Default output voltage: 13.6 V. Max output current: 12 A.

- Make sure the external device is within the output specifications of the cable.
- DO NOT directly connect to a lithium battery with an XT60 port using the SDC to XT60 power cable. Make sure to connect the power station to a balanced charger first.

## 3.2 Car Recharging

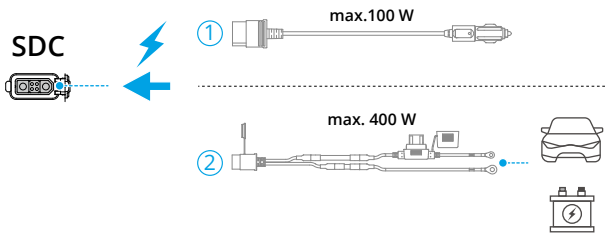


1. Car Power Charging Cable
2. Car Battery Charging Cable

- The power supply capacity varies from car to car. When using the charging cable for the first time to charge the power station, it is recommended to set a lower charging power in the app, and gradually increase the power as needed.

- Make sure the connected car power supply is within the specifications of the accessory. Otherwise, it may cause abnormal performance or even damage to the power station.
- Make sure that the power adapter is securely connected to the car power port and that the car engine is started before recharging.

 © 2026 DJI All Rights Reserved.

## 3.3 Solar Recharging

### Single Panel Connection

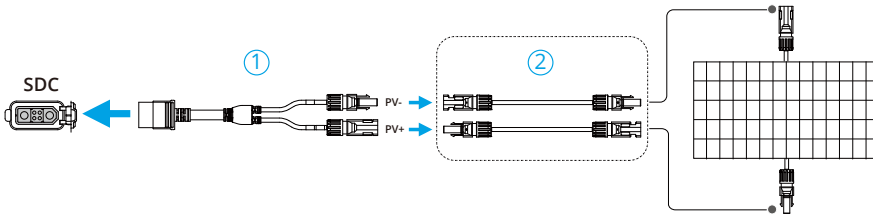


### Parallel Connection

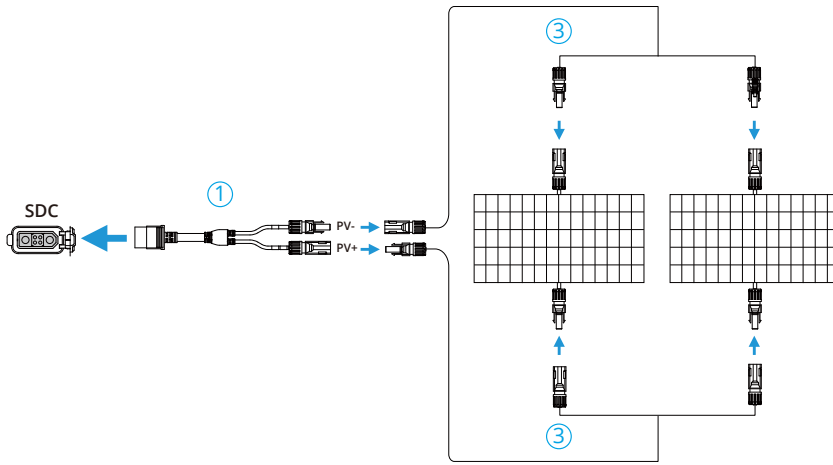


1. MC4 Solar Power Charging Cable
2. Solar Panel MC4 Extension Cable
3. Solar Panel MC4 Parallel Cable

⚠ It is recommended to use officially authorized solar panels. DO NOT mix different types of solar panels. Make sure the connected solar panels are within the input specifications of the adapters. Otherwise, the devices may be damaged.

When using multiple recharging methods simultaneously, solar recharging will take priority by default. Recharging sequence can be adjusted in DJI Home App: Tap ⚙ at the upper right corner and tap **Energy Management**, enable **Custom Backup Reserve Level** and modify the **Backup Reserve Level**. When the battery level is below the backup reserve level, multiple recharging methods can be used

© 2026 DJI All Rights Reserved. 

simultaneously. When the current battery level is above the backup reserve level, only solar recharging is available.

 © 2026 DJI All Rights Reserved.

# 4 Uninterruptible Power Supply (UPS)

Connect the power station to an AC power outlet, and connect an external device such as a computer to the power station. Press the AC button once, UPS is enabled if appears on the display screen.

When the power grid is normal, the AC power outlet powers both the power station and the connected device.

In case of a sudden power outage, the power station can automatically switch to power supply status, ensuring that the connected device remains in normal operation.

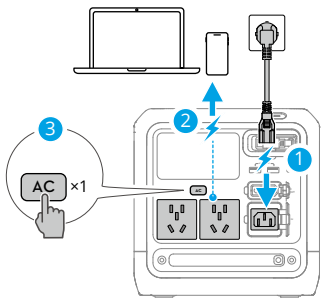


- In UPS mode, you can enable **AC Output Auto-Restoration** in DJI Home App. When enabled, in case of a power outage and the power station turns off after the battery runs out, the power station will automatically restart AC output and re-enter UPS mode once grid power is restored and the power station is charged to 5%.

- The power station only supports basic UPS feature and does not support 0ms seamless switching. DO NOT connect the power station to devices that require 0ms UPS, such as a medical equipment. Otherwise, it may cause the device to malfunction.
- It is recommended to connect only one device at a time during use. Connecting multiple devices may trigger the station's overload protection, resulting in a power interruption. DJI assumes no liability for any device malfunctions, data loss, or any other direct or indirect losses resulting from failure to follow the instructions in this document.
- This function is unavailable in some regions. Refer to local laws and regulations for more information.
- Due to restrictions by local laws and regulations in some countries and regions, the actual output power of the power station may be lowered in UPS mode.

© 2026 DJI All Rights Reserved. 

# 5 Appendix

## 5.1 Firmware Update

### Using DJI Home App

If the device is connected to DJI Home App, a prompt will appear in the app when new firmware is available. Follow the instructions in the app to update the firmware. An internet connection is required during the firmware update.

You can also update the firmware in DJI Home App: tap ⚙ at the top right corner, and tap **Firmware Update** > **Update**.

⚠
- Before updating, make sure the device has enough battery level and stable network connection.
- Connect the accessories to the power station to update the firmware together.

### Using DJI Assistant 2 (Power Series)

Make sure that the computer is connected to the internet before the firmware update. Follow the instructions below to ensure a successful firmware update:

1. Power off the device, press and hold the AC button and the power button simultaneously, until the USB-C icon starts to blink on the display screen.
2. Connect the computer to the designated USB-C port as shown in the figure.

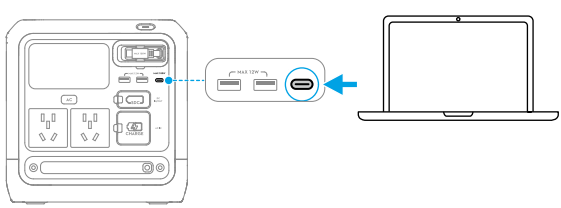


3. Launch DJI Assistant 2, select the product, and click the firmware update button on the left side.
4. Select the firmware version, carefully read the prompts in DJI Assistant 2, and click update. The firmware will be downloaded and uploaded to the device automatically.
5. The firmware will be updated automatically, and the display screen will show the update progress. Wait for processing to complete. The device will restart automatically after the firmware update is done.

 © 2026 DJI All Rights Reserved.

- DO NOT power off the device or disconnect the device from the computer during a firmware update.
- If the firmware update fails, the display screen will show UPGD FAIL. Disconnect the device from the computer and the AC power outlet, press and hold the power button for five seconds to power off the device, and try again.

## 5.2 Log Export

1. Power off the device, press and hold the AC button and the power button simultaneously, until the USB-C icon starts to blink on the display screen.

   Users can open device list from DJI Home App, and tap **Help** to enable **Device Log Export** mode.

2. Connect the computer to the designated USB-C port as shown in the figure.

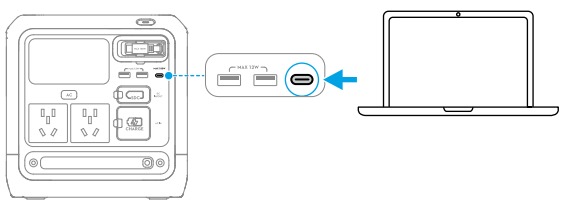

3. Run DJI Assistant 2, click **Log Export** on the left side, select the log from the log list and save. Wait for the export to complete.
4. Restart the power station to resume normal use after completing log export.

## 5.3 Maintenance

1. The power station should be stored in a cool and dry environment without direct sunlight at the specified storage temperature. DO NOT place the power station in water or where water may leak.
2. DO NOT store the power station for an extended period after fully discharging. Otherwise, the battery may over-discharge and cause irreparable damage to the battery cell.
3. For long-term storage, it is recommended to maintain the product's battery level at 50% to 70% (ideally around 60%). Storing with high battery level for a long duration can cause the battery to age more quickly, while storing with low battery levels can

© 2026 DJI All Rights Reserved. 

cause over-discharge. It is recommended to check the battery level every 3 to 4 months during storage and recharge if necessary.

4. Charge and discharge the power station once every 6 months to ensure the battery performance: discharge the power station to below 15%, power off for more than two hours, and then charge it to 100% in Standard Recharge mode.
5. Clean the ports with a clean, dry cloth if there is any noticeable build up. DO NOT clean the power station with alcohol or other flammable solvents.

## 5.4 Disposal

1. The power station contains hazardous chemicals, make sure to strictly follow local regulations regarding the disposal and recycling of batteries. DO NOT dispose of the power station in a regular waste disposal container.
2. Dispose of the power station in a suitable recycling container only after fully discharging it.
3. Power stations that are over-discharged, swollen, involved in a crash, come into contact with liquid, damaged, or leaky must be disposed of properly. DO NOT use any power station in such a condition in order to avoid damage or injury. Contact a professional battery disposal or recycling agent for further assistance.

## 5.5 Specifications

Visit the following website for specifications.

https://www.dji.com/power-1000-mini/specs

## 5.6 Compatibility

Visit the following website to get the information on compatible products.

https://www.dji.com/power-1000-mini/downloads

 © 2026 DJI All Rights Reserved.

## 5.7 Types of AC Output Ports

CN

NA & JP

AU

© 2026 DJI All Rights Reserved. 

EU

UK

 © 2026 DJI All Rights Reserved.

Contact
**DJI SUPPORT**

This content is subject to change without notice.
Download the latest version from

https://www.dji.com/power-1000-mini/downloads

If you have any questions about this document, please contact DJI by sending a message to **DocSupport@dji.com**.

DJI is a trademark of DJI.
Copyright © 2026 DJI All Rights Reserved.