HOLZMANN MASCHINEN GmbH
Marktplatz 4 · A-4170 Haslach
Tel. +43 7289 71 562-0
info@holzmann-maschinen.at

www.holzmann-maschinen.at

Originalfassung

DE BETRIEBSANLEITUNG **BLOCHBANDSÄGE**

Übersetzung / Translation

EN USER MANUAL **HEAD BANDSAW**

FR MODE D'EMPLOI **SCIE À RUBAN BLOCH**

ES INSTRUCCIONES DE SERVICIO **ASERRADERO DE CINTA**

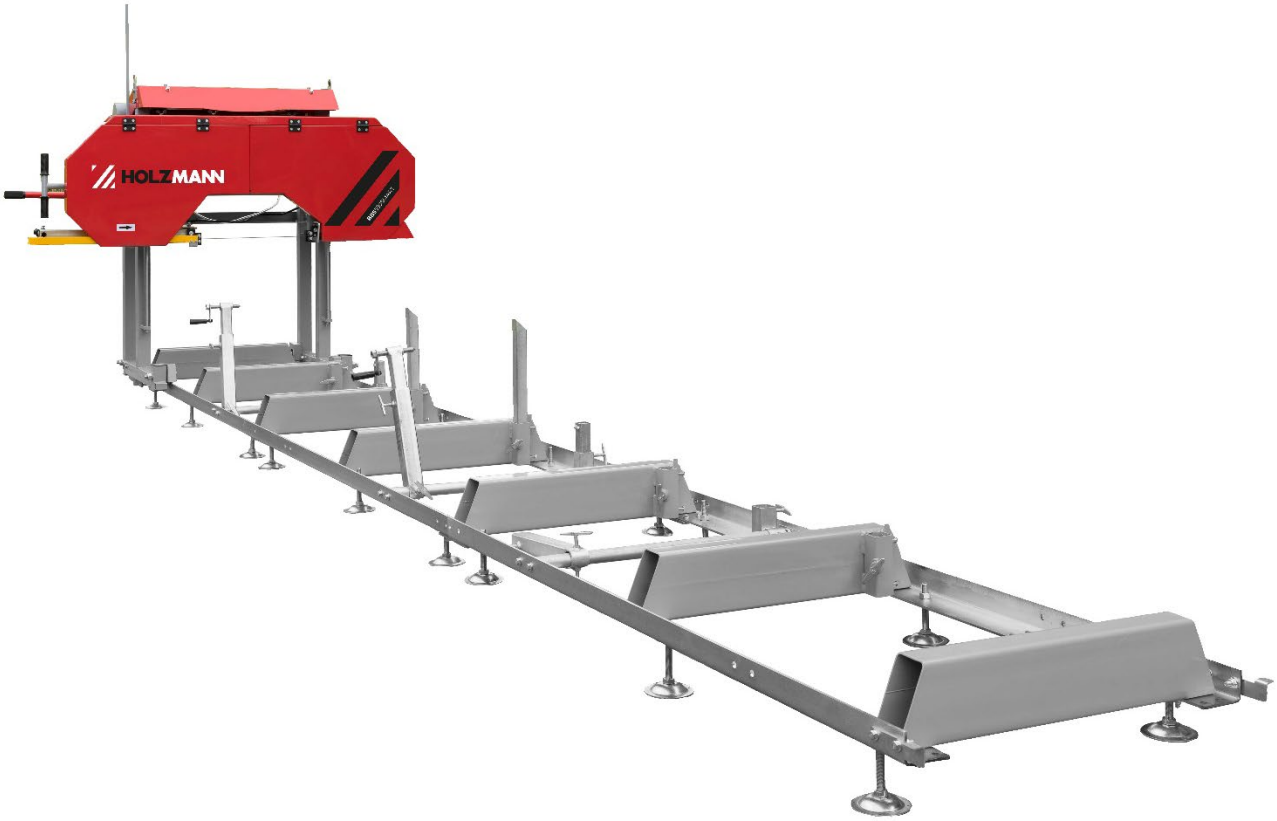

BBS550SMART_400V

YOUR JOB. OUR TOOLS.

Edition: 26.08.2022 – Revision – 00 – RaR – DE/EN/FR/ES

DE	**Warnschilder und/oder Aufkleber an der Maschine, die unleserlich sind oder entfernt wurden, sind umgehend zu erneuern.**
EN	**Missing or non-readable security stickers have to be replaced immediately.**
FR	**¡Deben sustituirse inmediatamente los letreros de advertencia y/o las pegatinas que haya en la máquina, que se hayan vuelto ilegibles o se hayan retirado!**
ES	**Les panneaux d'avertissement et/ou autocollants d'avertissement illisibles ou retirés sur la machine doivent être remplacés immédiatement!**

3 TECHNIK / TECHNICS / TECHNIQUE / TÉCNICA

3.1 Lieferumfang / Delivery content / Contenu de la livraison / Volumen de suministro

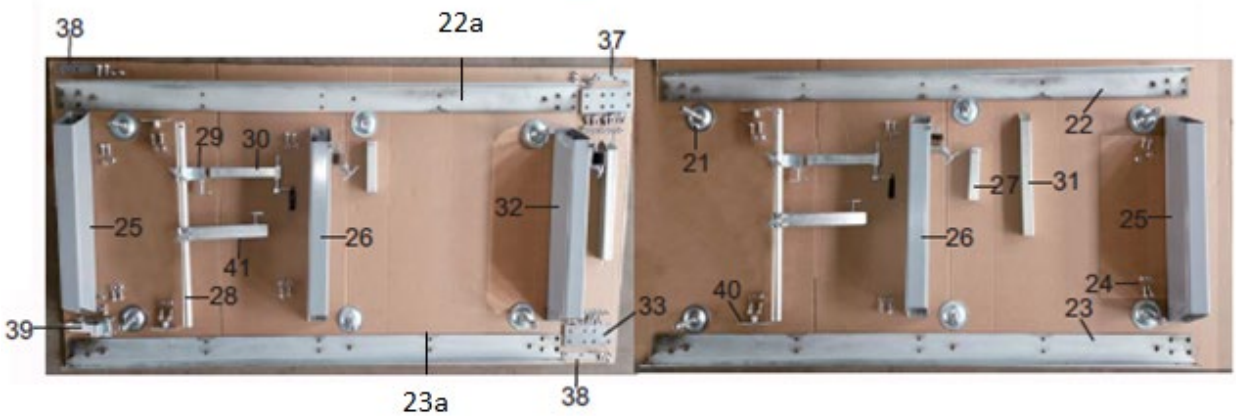

#	Beschreibung / Description	Qty.	#	Beschreibung / Description	Qty.
1	Maschinenkopf / machine head / Tête de machine / Cabezal de la máquina	1	**23**	Laufschiene rechts / Main „L“ channel right / Glissière côté droit / Riel guía a la derecha	1
2	Kühlmittelsystem / coolant system / Système de liquide de refroidissement / Sistema de refrigerante	1	**23a**	Verlängerung rechts / Extension “L” channel right / Prolongement côté droit / Prolongación a la derecha	1
3	Halterung Kühlmitteltank / holder for coolant / Fixation du réservoir de liquide de refroidissement / Soporte del depósito de refrigerante	1	**24**	Schraube / Bolt M10x30 / Vis / Tornillo Mutter / nut / Écrou / Tuercas	47 48
4	Schraube / screw M10x20 / Vis / Tornillo Scheibe / washer / Rondelle / Arandela Sprengring /spring washer / Bague d'écartement / Anillo retenedor	2 4 4	**25**	Baumauflage / Support tube C / Support d'arbre / Soporte tubo C	2
5	Kurbel / handle / Manivelle / Manivela	1	**26**	Baumauflage / Support tube B / Support d'arbre / Soporte tubo C	2
6	Kettenrad / Chain wheel / Pignon de chaîne / Rueda de cadena	1	**27**	Kurzer Anschlag / short stop tube / Butée courte / Tope corto	2
7	Platte für Kettenbox / Bottom plate for chain box / Plaque de la boîte à chaîne / Placa para la caja para cadenas	1	**26**	Schraube / Bolt M12x25 / Vis / Tornillo Scheibe / washer / Rondelle / Arandela Sprengring / spring washer / Bague d'écartement / Anillo retenedor	4 4 4
8	Kettenabdeckung / Cover for chain box / Cache de chaîne / Cubierta de cadena	1	**27**	Kurze Anschlag / Short stop tube / Butée courte / Tope corto	2
9	Kette / Chain / Chaîne / Cadena	1	**28**	Strebe / Round bar for stop / Entretoise / Varilla de soporte	2
10	Schraube / Screw M5x8 / Vis / Tornillo Scheibe / washer / Rondelle / Arandela	8 8	**29**	Strebenhalterung / Stop holder / Fixation de jambe de force / Soporte de traversas	2
11	Schraube / Bolt M12x40 / Vis / Tornillo Scheibe / washer / Rondelle / Arandela Sprengring / spring washer / Bague d'écartement / Anillo retenedor	4 4 4	**30**	Klemmbügel / Clamp / Étrier de serrage / Asa de fijación	2
12	Vertikale Führungsstange Sägekopf / Sliding post / Tige conductrice verticale de la tête de scie / Barra guía vertical cabezal de serrado	2	**31**	Langer Anschlag / Long stop / Butée longue / Tope largo	2
13	Schraube / Bolt M10x80 / Vis / Tornillo Scheibe / washer / Rondelle /Arandela Sprengring / springwasher / Bague d'écartement / Anillo retenedor Scheibe / big_washer / Rondelle / Arandela Mutter / nut / Écrou / Tuercas	8	**32**	Baumauflage / support tube A / Support d'arbre / Soporte tubo C	1

14	Hebehaken / Lift holder / Crochet de levage / Gancho de elevación	2	**33**	Verbindungsplatte / joint plate / Plaque de jonction / Placa de unión	2
15	Schraube / bolt M10x80 / Vis / Tornillo Scheibe / washer / Rondelle / Arandela Federring / springwasher / Rondelle-ressort / Arandela elástica Mutter / nut / Écrou / Tuercas	10 20 10 10	**34**	Schiebe-Ziehgriff / Push-pull handle / Poignée de traction coulissante / Asidero empujar-tirar	1
16	Vertikaler Rahmenteil links / vertical frame left / Pièce de châssis verticale côté gauche / Bastidor parcial a la izquierda	1	**35**	Zeiger / Pointer assy. / Aiguille / Puntero	1
17	Zwischenplatte / middle shelf / Plaque intermédiaire / Placa intermedia	1	**36**	Zeiger / Pointer aquare rod / Aiguille / Puntero	1
18	Vertikaler Rahmenteil rechts / Vertical frame right / Pièce de châssis verticale côté droit / Bastidor parcial a la derecha	1	**37**	Endanschlag 1 / stop 1 / Butée fin de course 1 / Tope final 1	1
19	Schraube / bolt M8x20 / Vis / Tornillo Scheibe / washer / Rondelle / Arandela	4 4	**38**	Endanschlag 2 / stop 2 / Butée fin de course 2 / Tope final 2	2
20	Anschlag / Stop holder / Butée / Tope	2	**39**	Endanschlag 3 / stop3 / Butée fin de course 3 / Tope final 3	1
21	Einstellbarer Fuß / adjustable foot / Pied réglable / Pie ajustable Mutter / nut / Écrou / Tuercas	12 24	**40**	Befestigungsplatte Strebe / fixation plate round bar stop / Plaque de fixation d'entretoise / Placa de sujeción traversa	4
22	Laufschiene links / Main “L” channel left / Glissière côté gauche / Riel guía a la izquierda	1	**41**	Strebenhalterung / long stop holder / Fixation de jambe de force / Soporte de traversas	2
22a	Verlängerung links / Extension “L” channel left / Prolongement côté gauche / Prolongación a la izquierda	1			

3.2 Komponenten / Components / Composants / Componentes

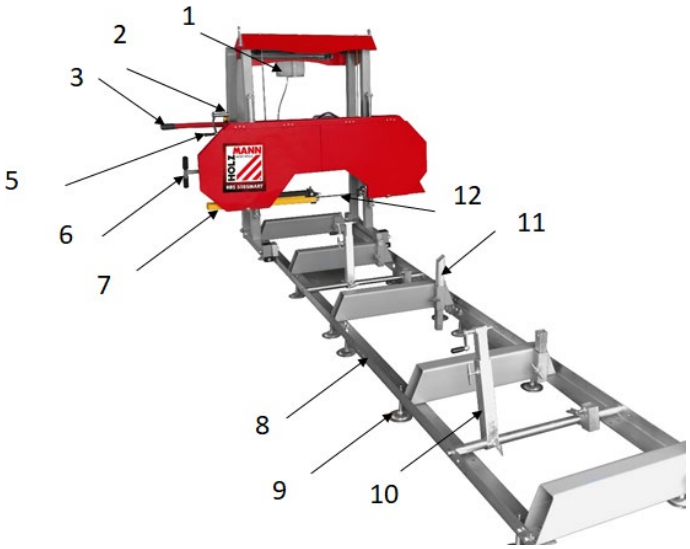

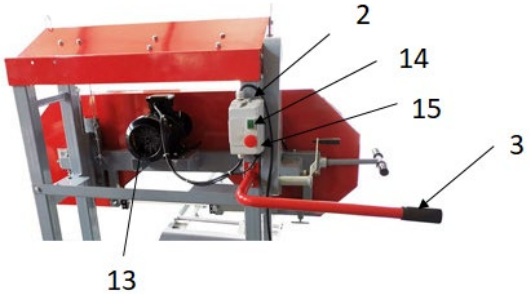

	Beschreibung / Description		Beschreibung / Description
1	Kühlmittelbehälter / coolant tank / Réservoir de liquide de refroidissement / Depósito de refrigerante	**9**	Standfüße / legs / Pieds de support / Patas
2	Bedieneinheit Motor / Switch-Box Motor / Unité de commande du moteur / Unidad de mando motor	**10**	Baumhalterungen / log supports / Supports d'arbres / Soportes para troncos
3	Bediengriff / operation handle / Poignée de commande / Mango	**11**	Baumhalterungen / log supports / Supports d'arbres / Soportes para troncos
4	EIN-AUS-Schalter / ON-OFF-switch / Interrupteur MARCHE-ARRÊT / Interruptor On/Off	**12**	Sägeband / saw blade / Ruban de scie / Cinta de la sierra
5	Höhenverstellung / height adjustment / Réglage en hauteur / Ajuste en altura	**13**	Motor / motor / Moteur / Motor
6	Hebel Sägebandspannung / l ever saw blade tension / Levier de la tension du ruban de scie / Palanca de tensión de la cinta de la sierra	**14**	Startknopf / start-button / Bouton de démarrage / Botón de arranque
7	Sägebandführung / saw blade guidance / Guide du ruban de scie / Guía de la cinta de la sierra	**15**	Stopknopf / stop-buton / Bouton d'arrêt / Botón de parada
8	Laufschiene / track / Glissière / Riel guía		

3.3 Technische Daten / Technical data / Données techniques / Datos técnicos

Spezifikation / Specification	
Netzspannung / Voltage / Tension / Tensión de red	400 V / 3p / 50 Hz
Motorleistung Antriebsrad / Motor power bandwheel / Puissance de la roue motrice / Potencia del motor de la rueda de accionamiento	5,5 kW
Max. Stammdurchmesser / Max. log diameter / Diamètre max. du tronc / Diámetro máx. del tronco	Ø 550 mm
Max. Brettbreite / Max. board width / Largeur max. de la planche / Ancho máx. de la tabla	530 mm
Min. Sägebandhub (Grundstellung) / Min. blade height(basic position) / Course min. du ruban de la scie (position de départ) / Carrera mín. de la cinta de la sierra (posición básica)	105 mm
Max. Schnitttiefe / Max. depth of cut / Profondeur max. de coupe / Profundidad máx. de corte	190 mm
Min. Baumstammlänge / min. log length / Longueur min. de tronc d'arbre / Longitud mín. del tronco	1050 mm
Schnittlänge (Grundversion) / Max. log length (standard model) / Longueur de coupe (version de base) / Longitud del corte (versión estándar)	3,2 m
Optional: *Verlängerungssektion / track section/ Section d'extension / Sección de prolongación*	2,0 m

Max. Vorschubgeschwindigkeit / max. feed speed / Vitesse max. d'alimentation / Velocidad máx. de avance	Manuell / manual / Manuel / Manual
Laufraddimension / bandwheel size / Dimension de la roue / Dimensiones del impulsor	Ø 475
Sägebanddimension / sawblade size / Dimension du ruban de scie / Dimensiones de la cinta de la sierra	3658 x 32 x 1,1 mm
Schnittfuge / kerf thickness / Trait de scie / Ranura de corte	1,5-2,2 mm
Sägebandgeschwindigkeit / sawblade speed / Vitesse du ruban de scie / Velocidad de la cinta de la sierra	18 m/s
Gewicht (net) / weight (net) / Poids (net) / Peso (neto)	335 kg
Gewicht (brutto) / weight (gross) / Poids (brute) / Peso (bruto)	387 kg
Schalldruckpegel L_{PA} / Sound pressure level L_{PA} / Niveau de pression acoustique L_{PA} / Nivel de presión sonora L_{PA}	89 dB(A) k=3dB(A)
Schallleistungspegel L_{WA} / Sound power level L_{WA} / Niveau de puissance sonore L_{WA} / Nivel de potencia acústica L_{WA}	98 dB(A) k=3dB(A)
Verpackungsmaße / packaging dimension / Dimensions d'emballage / Dimensiones del embalaje	2170 x 630 x 860 mm
Maschinenabmessungen / machine dimension / Dimensions de la machine / Dimensiones de la máquina	4350 x 1600 x 1800 mm

(DE) Hinweis Geräuschangaben: Die angegebenen Werte sind Emissionswerte und müssen damit nicht zugleich auch sichere Arbeitsplatzwerte darstellen. Obwohl es eine Korrelation zwischen Emissions- und Immissionspegeln gibt, kann daraus nicht zuverlässig abgeleitet werden, ob zusätzliche Vorsichtsmaßnahmen notwendig sind oder nicht. Faktoren, welche den am Arbeitsplatz tatsächlich vorhandenen Immissionspegel beeinflussen, beinhalten die Eigenart des Arbeitsraumes und andere Geräuschquellen, d. h. die Zahl der Maschinen und anderer benachbarter Arbeitsvorgänge. Die zulässigen Arbeitsplatzwerte können ebenso von Land zu Land variieren. Diese Information soll jedoch den Anwender befähigen, eine bessere Abschätzung von Gefährdung und Risiko vorzunehmen.

(EN) Notice noise emission: The values given are emission values and therefore do not have to represent safe workplace values at the same time. Although there is a correlation between emission and immission levels, it cannot be reliably deduced whether additional precautions are necessary or not. Factors influencing the actual immission level at the workplace include the nature of the workspace and other noise sources, i.e. the number of machines and other adjacent operations. The permissible workplace values may also vary from country to country. However, this information should enable the user to make a better assessment of hazard and risk.

(FR) Avis Données sur le bruit : Les valeurs indiquées sont des valeurs d'émission et ne représentent donc pas nécessairement des valeurs de sécurité sur le lieu de travail. Bien qu'il existe une corrélation entre les niveaux d'émission et d'immission, il est impossible de déduire de manière fiable si des mesures de précaution supplémentaires sont nécessaires ou non. Les facteurs influençant le niveau d'immission réellement présent sur le lieu de travail comprennent les caractéristiques de la salle de travail et d'autres sources de bruit, c'est-à-dire le nombre de machines et d'autres processus de travail adjacents. Les valeurs autorisées sur le lieu de travail peuvent également varier d'un pays à l'autre. Toutefois, ces informations devraient permettre à l'utilisateur de mieux évaluer le danger et le risque.

(ES) Aviso sobre los valores de ruido: Los valores indicados son valores de emisión y, por lo tanto, no representan necesariamente al mismo tiempo valores seguros en el lugar de trabajo. Aunque hay una correlación entre los niveles de emisión y los de inmisión, no se puede deducir con certeza si es necesario adoptar medidas de precaución adicionales o no. Entre los factores que influyen en el nivel de inmisión real en el lugar de trabajo, se encuentran la naturaleza del espacio de trabajo y otras fuentes de ruido, es decir, el número de máquinas y otros procesos de trabajo adyacentes. Asimismo, los valores admisibles en el lugar de trabajo pueden variar de un país a otro. No obstante, esta información debe capacitar al usuario a evaluar mejor los peligros y los riesgos.

11 PREFACE (EN)

Dear Customer!

This manual contains information and important notes for safe commissioning and handling of the head bandsaw BBS550SMART, hereinafter referred to as “machine” in this document.

This manual is part of the machine and must not be removed. Save it for later reference and if you let other people use the machine, add this manual to the machine.

Please read and note the safety instructions!

Before first use read this manual carefully. It eases the correct use of the machine and prevents misunderstanding and damages of machine.

Due to constant advancements in product design, construction, illustrations and contents may deviate slightly. If you notice any errors, please inform us.

We reserve the right to make technical changes!

Check the goods immediately after receipt and note any complaints on the consignment note when taking over the goods from the deliverer!

Transport damage must be reported to us separately to us within 24 hours.

HOLZMANN MASCHINEN GmbH cannot accept any liability for transport damage that has not been reported.

Copyright

© 2022

This documentation is protected by copyright. All rights reserved! In particular, the reprint, translation and extraction of photos and illustrations will be prosecuted.

The place of jurisdiction is the regional court Linz or the court responsible for 4170 Haslach is valid.

Customer service contact

HOLZMANN MASCHINEN GmbH

4170 Haslach, Marktplatz 4
AUSTRIA

Tel +43 7289 71562 - 0
info@holzmann-maschinen.at

12 SAFETY

This section contains information and important notes on the safe commissioning and handling of the machine.

For your safety, read this manual carefully before commissioning. This will enable you to handle the machine safely and thus prevent misunderstandings as well as personal injury and damage to property. Pay special attention to the symbols and pictograms used on the machine as well as the safety information and danger warnings!

12.1 Intended use of the machine

The machine is designed exclusively for the following activities:
The sawing of wooden logs within the predetermined machine limits.

NOTE

HOLZMANN MASCHINEN GmbH assumes no responsibility or warranty for any other use or use beyond this and for any resulting damage to property or injury.

12.1.1 Technical restrictions

The machine is designed for the work under the following conditions:

Relative humidity	max. 65 %
Temperature (operation)	+5 °C to +40 °C
Temperature (storage, transport)	-20 °C to +55 °C

12.1.2 Prohibited applications /Dangerous misuse

- Operation of the machine without adequate physical and mental aptitude
- Operating the machine without knowledge of the operating instructions
- Changes in the design of the machine
- Operating the machine under explosive conditions
- Operating the machine outside the specified power range
- Remove the safety markings attached to the machine.
- Modify, circumvent or disable the safety devices of the machine.

The prohibited/hazardous use or disregard of the information and instructions presented in this manual will result in the voiding of all warranty and damage claims against Holzmann Maschinen GmbH.

12.2 User requirements

The machine is designed to be operated by one person. The prerequisites for operating the machine are physical and mental fitness as well as knowledge and understanding of the operating instructions. Persons who, due to their physical, sensory or mental capabilities, inexperience or lack of knowledge, are unable to operate the machine safely must not use the machine without supervision or instruction by a responsible person.

Please note that locally applicable laws and regulations determine the minimum age of the operator and may restrict the use of this machine!

Work on electrical components or equipment may only be carried out by a qualified electrician or carried out under the guidance and supervision of a qualified electrician.

Put on your personal protective equipment before working on the machine.

12.3 General safety instructions

To avoid malfunctions, damage and health impairments when working with the machine, the following points must be observed in addition to the general rules for safe working:

- Choose a level, shaking-free, non-slip surface as a place to set up.
- Make sure you have enough space around the machine!
- Ensure sufficient light conditions in the workplace to avoid stroboscopic effects!
- Use only suitable tool that is free cracks and other errors (e.g. deformations).
- Remove tools from the machine before turning it on.
- Keep the area around the machine free of obstacles (e.g. dust, chips, etc.).
- Never leave the running machine unattended.
- The machine may only be operated, maintained or repaired by persons who are familiar with it and who are aware of the dangers arising from this work.
- Make sure that unauthorized persons maintain a corresponding safety distance from the device, and in particular keep children away from the machine.
- Wear suitable work clothes (eye protection, hearing protection, gloves duster mask, safety shoes) as well as tight fitting work protection clothing – never loose clothes, ties, jewellery, etc. – catchment hazard!
- Hide long hair under a hair protector.
- Do not remove splinters and chips by hand!
- Refrain from working on the machine in case of tiredness, inconcentration or under the influence of medication, alcohol or drugs!
- Do not use the machine in areas where vapours of paints, solvents or flammable liquids pose a potential hazard (fire or explosion hazard!).
- Do not smoke in the immediate vicinity of the machine (fire hazard)!
- Make sure the device is grounded.
- Use only suitable extension cables.
- Always disconnect the device from the power grid before cleaning, maintenance or repair work and secure it against accidental reactivation

12.4 Electrical safety

- Make sure that the machine is grounded.
- Only use suitable extension cables.
- A damaged or tangled cable increases the risk of electric shock. Handle the cable with care. Never use the cable to carry, pull or disconnect the power tool. Keep the cable away from heat, oil, sharp edges or moving parts.
- Proper plugs and outlets reduce the risk of electric shock.
- Water entry into the machine increases the risk of electric shock. Do not expose the machine to rain or moisture.
- The machine may only be used if the power supply is protected by a residual current circuit breaker.
- Use the machine only when the ON-OFF switch is in good working order.
- Before connecting the machine always make sure that it is switches off.

12.5 Special safety instructions for this machine

- Check the condition of the machine daily before and after use and do not put the machine into operation before. During inspection, pay close attention to the connections, safety devices and safety signs.
- Secure the logs with the screw cap clamping device instead of using the hand or the help of another person. This safety measure enables correct tool operation with both hands.
- When handling coiled saw blades, take special care to prevent them from unrolling uncontrollably to avoid the risk of injury.
- Excessive noise can cause hearing damage and temporary or permanent hearing loss. Wear hearing protection certified according to health and safety regulations to limit noise exposure

- Ensure that unauthorised persons maintain an appropriate safety distance from the machine, and in particular keep children away from the machine.

12.6 Hazard warnings

Despite intended use, certain residual risks remain. Due to the design and construction of the machine, hazardous situations may occur which are identified as follows in these operating instructions:

DANGER	
	A safety instruction designed in this way indicates an imminently hazardous situation which, if not avoided, will result in death or serious injury.

WARNING	
	A safety instruction designed in this way indicates a potentially hazardous situation which, if not avoided, could result in death or serious injury.

CAUTION	
	A safety instruction designed in this way indicates a possibly hazardous situation which, if not avoided, may result in minor or moderate injury.

NOTE	
	A safety notice designed in this way indicates a potentially hazardous situation which, if not avoided, may result in property damage.

Regardless of all safety regulations, your common sense and your appropriate technical aptitude/training are and remain the most important safety factor in the error-free operation of the machine. **Safe working depends on you!**

13 TRANSPORT

WARNING	
	Risk of injury from suspended or unsecured load! Damaged or insufficiently strong hoists and load slings can result in serious injury or even death. → Before use, therefore, check hoists and load slings for adequate load-bearing capacity and perfect condition. Secure the loads carefully. Never stand under suspended loads!

Transport the machine in its packaging to the place of installation. To manoeuvre the machine in the packaging, a pallet truck or forklift truck with the appropriate lifting force) can be used, for example. The specifications can be found in the chapter Technical data. For proper transport, also observe the instructions and information on the transport packaging regarding centre of gravity, lifting points, weight, means of transport to be used as well as the prescribed transport position etc. Ensure that the selected lifting equipment (crane, forklift, pallet truck, load sling, etc.) is in perfect condition.

Lifting and transporting the machine may only be carried out by qualified personnel with appropriate training for the lifting equipment used.

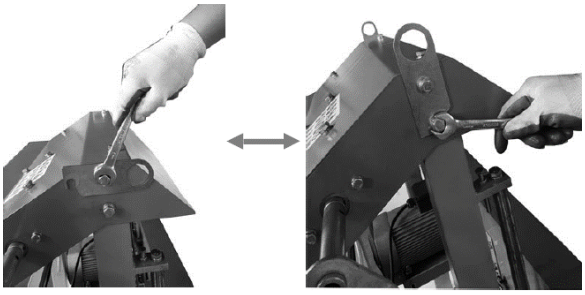

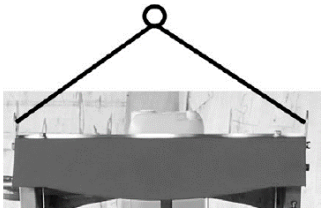

14 ASSEMBLY

14.1 Preparation

14.1.1 Check delivery content

Check the delivery immediately for transport damage and missing parts. Report any damage or missing parts to your dealer or the shipping company immediately. Visible transport damage must also be noted immediately on the delivery note in accordance with the provisions of the warranty, otherwise the goods are deemed to have been properly accepted.

14.1.2 Requirements for the installation site

For optimizing the function of machine and to achieve maximum cutting precision, it is recommended to install the machine on a flat concrete area, in a hall or under a shelter. The use of any other base must be consulted with the producer.
The machine must be installed in a hall or under a shelter. The machine must be protected against rain.
Recommendation/preconditions:
a) Plan sufficient space for feeding in the work piece, removing the work piece and for maintenance of the machine.
b) The working area for the saw and them operator must be flat, clean and must not threaten the operation and activity of the operator.
c) Installation of the lifting equipment for heavy work pieces.
d) Ensure good lighting in the workplace.
For the spatial arrangement of machines keep to all valid standards and hygiene regulations about the air space in the workplace.
The location of the machines must exclude any threat to the other employees from the operation in the case of an accident with the tool, ejection of the tooled materials in the case of insufficient clamping, cutting of the saw band, etc.
The **hazardous zone** is in the area of 2.5 m from each side of the machine. In the hazardous area there must not be any unauthorized personnel. In the hazardous zone there must not be any other items and the ground must be flat to prevent any stumbles.
The whole area of the hazardous zone must be bordered by the fence with the entrance gate. The fence must have the following parameters:
- mesh with the size of mesh loop 50mm
- total height of the mesh min. 1m
- a distance of 2-3m between columns
- the gate must be fitted with a padlock. The keys from the padlock must only be given to the service employee and the operator. The fence is not part of the machine and must be constructed by the machine operator before commissioning the machine!

14.1.3 Foundation plan

The machine does not need a special foundation - only a level and firm concrete floor will do.
The constructed track must be roughly levelled.

14.2 Assemble

The sawhead is delivered pre-assembled, the following steps are necessary for assembling the machine.

1. Assembly the track (general information)

Assemble the individual tracks and secure them loosely with the nuts and bolts provided. It is important not to tighten the screws completely at this stage. This happens after the head has been mounted and rolled along the track. It is recommended to assemble the track on a solid and flat surface. Attach the feet at a height of about 10 cm.
Do not fully tighten the screws until the head has been assembly and saw head run is check.

NOTICE

Make sure the tracks run parallel and are already well leveled. Tighten the screws only after sawhead assembly and controlling the running properties of the sawhead.

2. single steps for the assembly the track

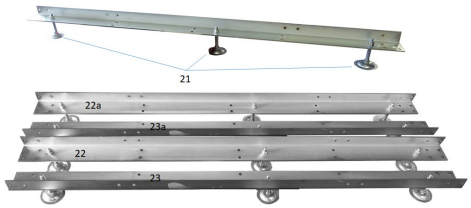

21..levelling feet (12 pcs with 24 nuts)
22.. Main „L“ channel left
23.. Main „L“ channel right
32.. Externsion „L“ channel left
33.. Externsion „L“ channel right

Assembly feet

Assembly 3 levelling feet per track part (22,23,22a and 23a). To do this, unscrew the lower nut to almost the same height on all feet (21), unscrew the upper nut and insert the threaded rod into the hole in the track and then secure it again using the upper nut.

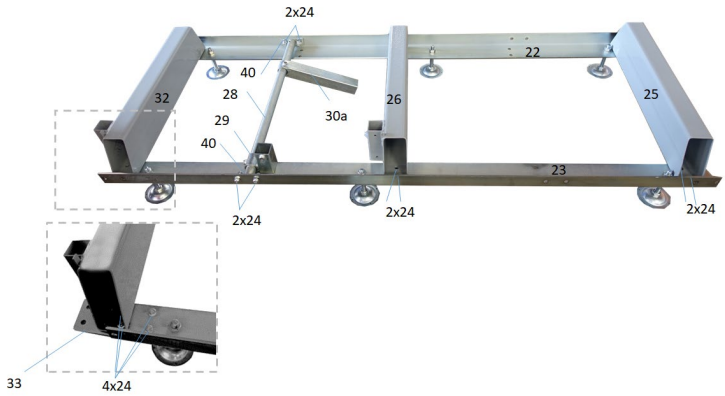

Log support assembly onto the track

Assemble log support pieces (25, 26 and 32) as shown on the track be use of screw and nuts (24).

Log clamps components (28, 40, 29 and 30a) are fastened to the tracks with screws and nuts (24) as shown. The clamps can be mounted at different positions along the track. Make sure that the log to be cut can always be securely fixed.

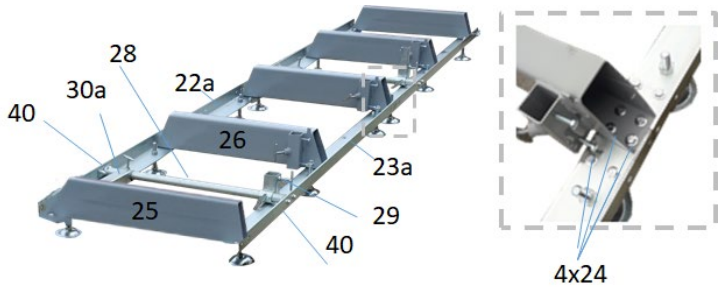

Assembly the log support(s) (25, 26) on the tracks (22a, 23a) as shown and fix them with screws and nuts (24).

If another extension section BBS550SMART_RB is used, only the log support (25) at the end has to be replaced by the log support (32) and the extension rails have to be mounted with the connection plate in the same way as the base track.

3. Carriage Assembly

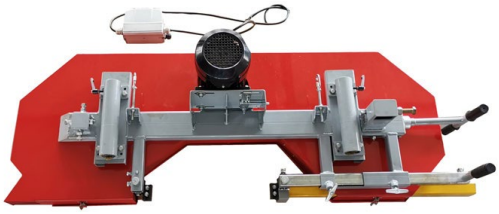

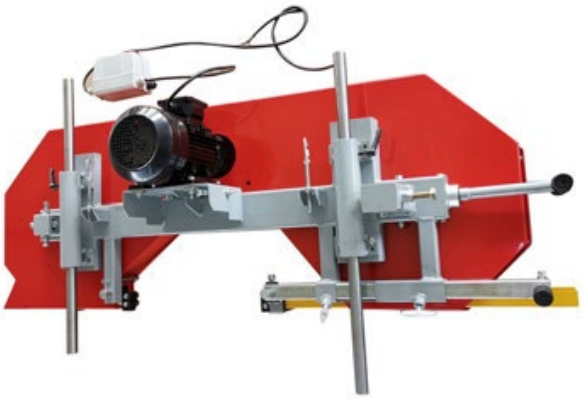

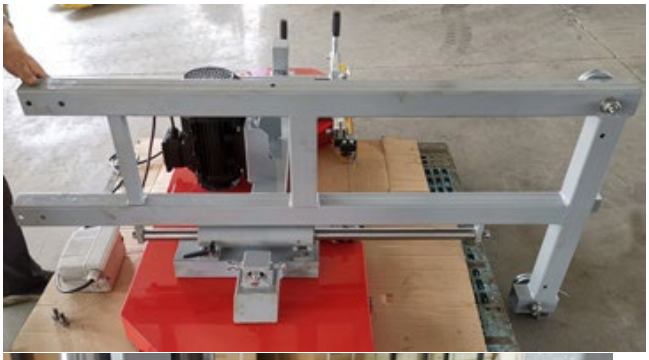

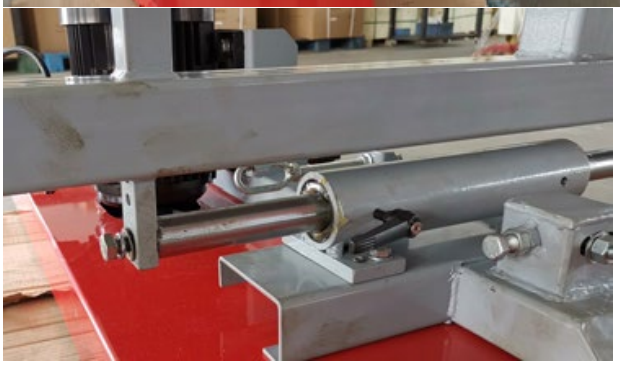

3.1 <u>Placing the machine head on the mounting support</u>
Lift the machine head out of the transport packaging and place it on a stable and clean surface..

NOTE	
!	2 persons are necessary due to the weight of the component. Any Contamination (particles,..) could scratch the surfaces.

3.2 <u>Completing the vertical guide</u>
Insert the 2 vertical posts into the sliding guides..

3.3 <u>Assemble frame parts</u>
Assemble both vertical frame parts (right, left-side) onto the vertical posts using screw/washer/spring-washer.

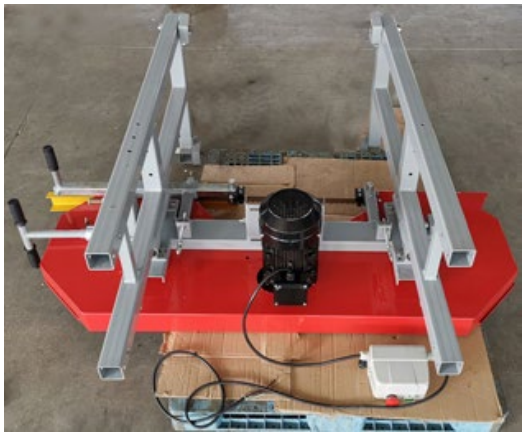

3.4 Assembly middle shelf

Fix the middle shelf with screw; washer and nut onto the right and left frame parts.

3.5 Assembly cover

The cover and the two lifting hooks are fastened to the left and right frame parts using screws/washers and nuts.

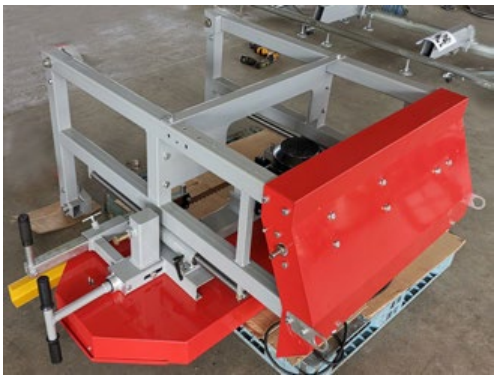

3.6 Chain assembly for lifting/lowering device

Fix the chain wheel and the plate for the chain cover to the right frame part with screws/washers/nuts.

Fix the plate for the chain cover on the upper side with screws on the cover.

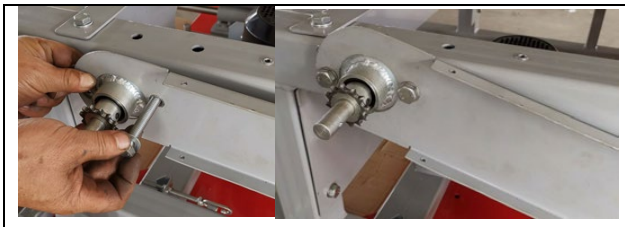

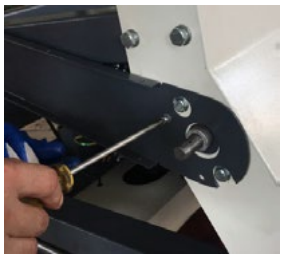

Attach the chain to the lower chain wheel and attach the chain wheel to the axle on the upper side and fix it in place.

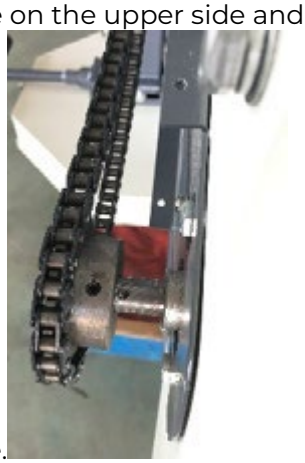

Assembly the chain cover and fix it to the chain cover plate with screws. Put on the handle.

3.7 Connecting the wire ropes for lifting/lowering mechanism

Connect the two ends of the steel cable to the holder on the machine head and turn the chain handle to tension the steel cable.

4. Place the saw unit on the track system of the machine

Place the saw unit with at least two persons on the track system and make sure that the carriage wheel grooves rest on the track. The square vertical post should be on the same side as the log supports.

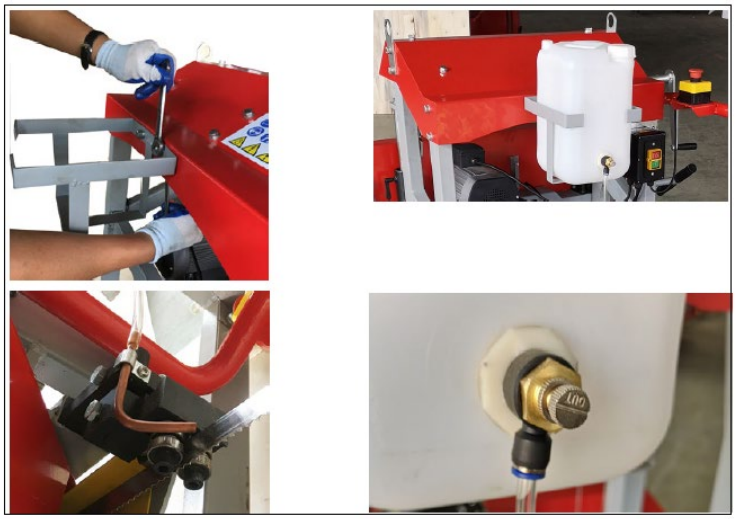	5. Assembly lubrication tank
	6. Assembly operation handle and motor control unit
	7. Assembly scale for height adjustment Assemble the square bar to the machine, assemble the scale pointer assembly to this bar.
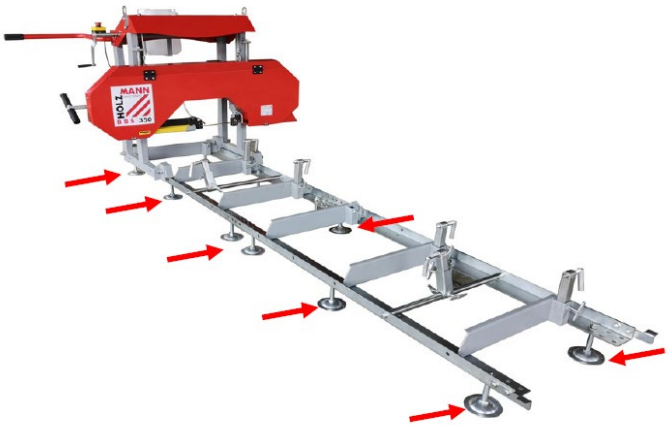	8. Put the sawhead on the track and make final adjustments for ensuring the parallel and height of the track. Then tighten the screws.

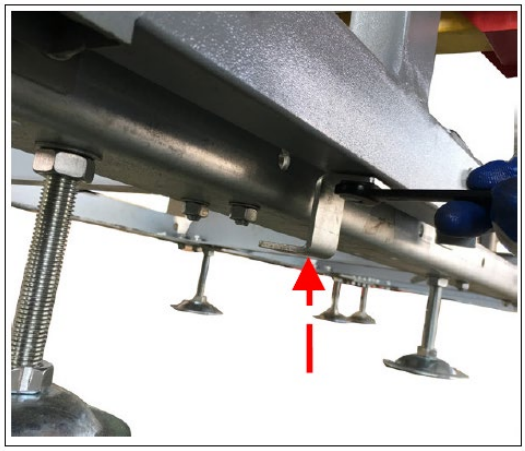	9. Install the two pieces anti-sway bar on both left and right machine bracket.
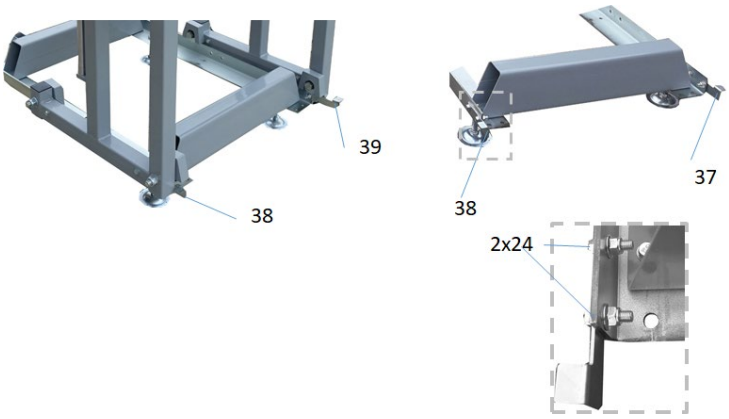	10. Assembly the end stops on the tracks Fasten the four end stops (2x38, 39, 40) with screws and nuts (24) to the ends of the tracks as shown.
	11. Assembly clamping bracket/ stops Insert clamp (30) into clamp holder and fix with screw (S1). Insert long stop (37) on log support and fix with screw. Insert the short stop (27) into the holder and also fix it with screws (S1). The angular position of the stops on the log support can be adjusted using the two screws (S2).
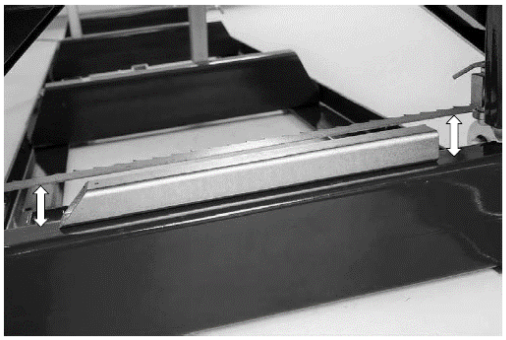	12. Control of the sawblade distance. If this is not identical on the left and right, it must be adjusted at the rear handle to either raise or lower one side.

14.3 Electrical connection

WARNING

Dangerous electrical voltage!

→ The machine may only be connected to the mains supply and the associated checks carried out by a qualified electrician or under the instruction and supervision of a qualified electrician!

- Check, whether the neutral connection (if existing) and the protective grounding function properly.
- Check, whether the supply voltage and the frequency correspond to the specifications of the machine.

NOTE

Deviation of the supply voltage and frequency!

A deviation from the value of the supply voltage of ±5 % is permissible.
A short-circuit fuse must be provided in the power supply system of the machine!

- Use a supply cable of type H07RN (WDE282) and take the required cross-section of the supply cable from a current carrying capacity table. Pay attention to the measures for protection against mechanical damage.
- Make sure that the power supply is protected by a residual current circuit breaker.
- Connect the device only to a properly grounded outlet.
- When using an extension cable, make sure that the dimension matches the connected load of the machine. The connection power can be found in the technical data, the correlation of cable cross-section and cable lengths can be found in the technical literature or obtain information from a specialist electrician.
- A damaged cable must be replaced immediately.

14.3.1 Setting up a 400 V machine

- The grounding conductor is yellow-green.
- Connect the supply cable to the corresponding terminals in the input box (L1, L2, L3, N and PE). If a CEE plug is available, the connection to the mains is made through an appropriately powered CEE coupling (L1, L2, L3, N and PE).

Plug connection 400V:	5-wire: **with** N-conductor 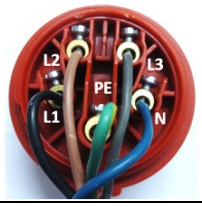	4-wire: **without** N-conductor 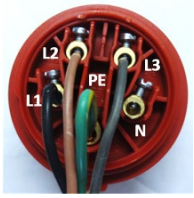

- After the electrical connection, check the correct running direction. If the machine runs in the wrong direction, swap two conductive phases, egg. L1 and L2, at the connection plug.

NOTE

- Operation is only permitted with residual current device (RCD) with maximum residual current of 30 mA.

15 OPERATION

Only operate the machine when it is in a perfect condition. Before each operation, a visual inspection of the machine must be carried out. Safety devices and operating elements must be checked carefully. Check screw connections for damage and tight fit.

15.1 Hand bandsaw set-up procedure

WARNING

Machine must be voltage-free and separated from the main.

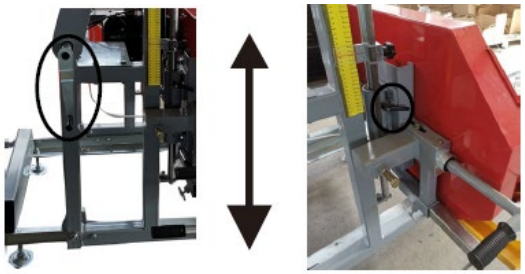	1. Adjust cutting height position Before turning the chain handle to move the saw unit up and down, first loosen the locking handles on the two guides. When you reach the desired position, tighten them again.
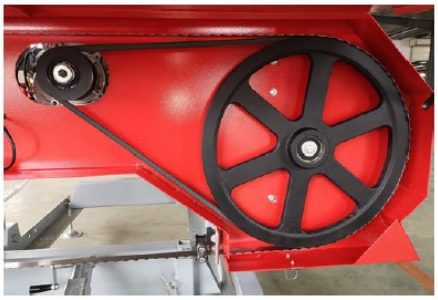	2. Check the belt tension: The belt tension is controlled by hand and if it is possible to push it more than 10cm, the belt should be tightened.
	3. Check blade tracking
	4. Check blade guide adjustment **CAUTION** Slide the blade guide over the blade so that only the required cut distance remains free.
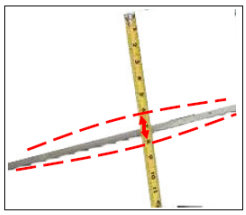	5. Check saw blade tension: Proper blade tension is achieved if the blade defects no more than 3-6 mm when it is firmly moved by hand at the center location of the blade.

	6. Check level of lubrication tank and refill if necessary. **NOTICE** Use only water with a light detergent (soapy liquor; Washing up) as a coolant.

15.2 Operation

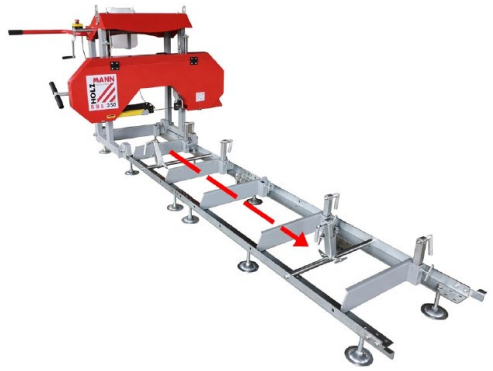	• Place a log onto the track and secure it with the log assembled supports. • Press the ON button. • Wait until saw blade reaches maximum speed. • Turn on the lubrication. • Set desired cutting height. • Slide saw head slowly over the track. • Turn off the machine after completing operation with the OFF-button.

16 CLEANING, MAINTENANCE, STORAGE, DISPOSAL

WARNING

Danger due to electrical voltage!

Handling the machine with connected power supply may result in serious injury or death.

→ Always disconnect the machine from the power supply before maintenance or repair work and secure it against unintentional reconnection.

16.1 Cleaning

Regular cleaning guarantees the long service life of your machine and is a prerequisite for its safe operation.

NOTE

Incorrect cleaning products can attack the finish of the machine. Do not use any solvents, nitro thinners or other cleaning products that could damage the machine's finish.
Observe the specifications and instructions of the cleaning agent manufacturer.

- Remove chips and dirt particles from the machine after each use with a proper tool.
- Prepare the surfaces and lubricate the bare machine parts with an acid-free lubricating oil (e.g. WD40 rust inhibitor).

16.2 Maintenance

The machine is low-maintenance and only a few parts need to be serviced. Malfunctions or defects that could affect your safety must be repaired immediately!

- Before each operation, check the perfect condition of the safety devices.

- Regularly check the perfect and legible condition of the warning and safety labels of the machine.
- Use only original spare parts recommended by the manufacturer.

16.2.1 Maintenance plan

The type and degree of machine wear depends to a large extent on the operating conditions. The following intervals apply when the machine is used within the technical limits:

Interval	Components	Action
Before usage	Band wheel bearing	Check for wear and if necessary replace it
	Blade guide bearing	Check for wear and if necessary replace it
	Log screws	Grease threads

16.2.2 Adjusting belt tension

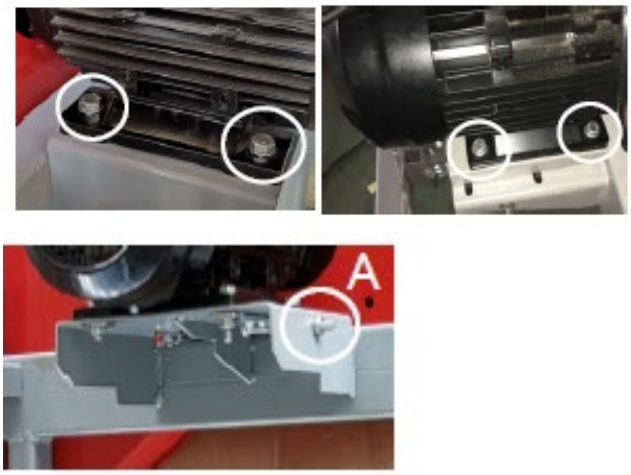

Loosen the 4 nuts on the motor.

Now that the motor can slide freely on the motor bracket, turn the 16mm nut (A) on the horizontal bolt clockwise. This will pull the motor towards the pin and tighten the belt more. Perform this step, step by step while checking the belt for correct deflection. It is also important to ensure that the motor is perpendicular to the drive belt. Excessive tightening may cause the motor to twist on the mounting plate, causing belt alignment problems and excesive wear. Once the desired belt tension is set, tighten the four motor bolts, if the drive belt is too tight, the 16mm nut on the horizontal bolt can be turned counterclockwise.

16.2.3 Adjusting blade tracking

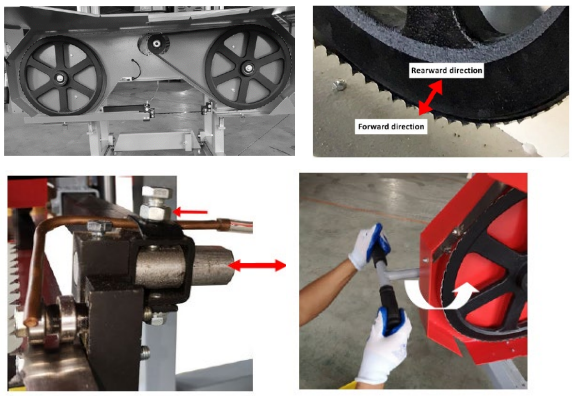

The blade should have the same distance between teeth to band wheel on both sides. If not, the following settings must be achieved.

1. Remove blade guide to ensure no influence on tracking while adjusting.

2. Take some tension off of the blade.

3. Adjusting the Right side:

Loosen the screw. With the adjustment screw, the angle of the wheel can now be changed. To move the blade on the wheel backwards, this screw must be rotated clockwise. Alternatively, turning the anti-clockwise bolt would force the blade to run more forwards on the wheel.

4. Adjusting the Left Side

Loosen the vertical screws by half a turn, this will take the clamping force off of the bandwheel shaft and allow it to move freely in the following steps.

Right side

Left side

Moving the blade forward:

Fix the horizontal screw (with a tool) and loosen the outer horizontal nut by a 1/2 turn. Then rotate the horizontal screw clockwise around a 1/2 turn.

Moving the blade backwards:

Fix the horizontal screw (with a tool) and loosen the outer horizontal nut by a 1/2 turn. Then turn the horizontal inner nut clockwise around a 1/2 turn.

Then tighten the vertical screws again.

Re-tension the blade and control blade tracking. Repeat the above steps if further compensation is required

16.2.4 Adjusting blade guidance

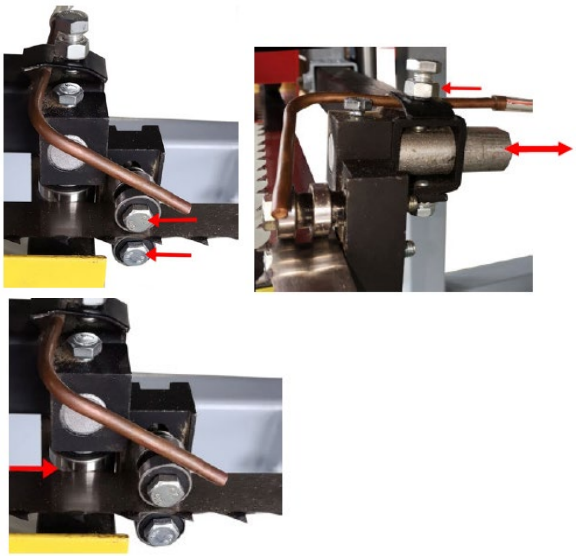

Adjust rolls of the blade guide in a way that there is a gap between rolls and blade of a paper width.

To do this, loosen the screws and adjust the rolls, then tighten the screws again.

16.2.5 Adjusting blade tension

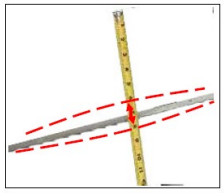

Proper blade tension is achieved if the blade defects no more than 3-6 mm when it is firmly moved by hand at the center location of the blade.

To increase blade tension rotate the lever for the sawblade tension clockwise.

NOTICE

Make sure the tracking adjustment bolt is sitting in recess. See Picture.

16.2.6 Changing the blade

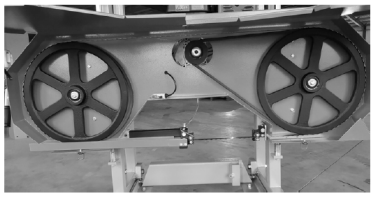

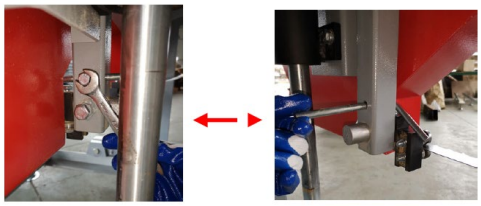

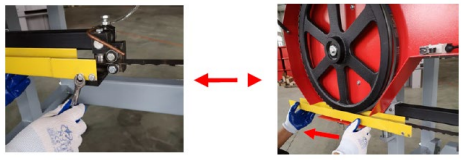

- Loosen screws and remove the guides.
- Reduce the blade tension and remove the blade.
- Insert the new blade and re-assemble the guides.
- Adjust the required blade tension as described above.

16.2.1 Changing the V-Belt

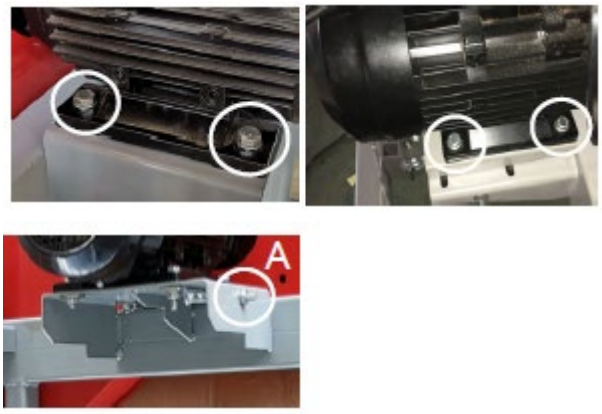	▪ Loosen screws on the motor. ▪ Reduce belt tension with the screws. ▪ Renew the belts. ▪ Adjust the correct belt tension again.

16.3 Storage

Store the machine in a dry, frost-proof and lockable place when not in use. Make sure that unauthorised persons and especially children do not have access to the machine.

NOTE

Improper storage can damage and destroy important components. Only store packed or already unpacked parts under the intended ambient conditions!

16.4 Disposal

Observe the national waste disposal regulations. Never dispose of the machine, machine components or operating equipment in the residual waste. If necessary, contact your local authorities for information regarding available disposal options.

If you purchase a new machine or equivalent equipment from your specialist dealer, he is obliged in certain countries to dispose of your old machine properly.

17 TROUBLESHOOTING

WARNING

Danger due to electrical voltage!

Handling the machine with connected power supply may result in serious injury or death.

→ Always disconnect the machine from the power supply before maintenance or repair work and secure it against unintentional reconnection.

Many possible sources of error can be eliminated in advance if the machine is properly connected to the mains.

If you are unable to carry out the necessary repairs properly and/or do not have the required training, always consult a specialist to solve the problem.

Problem	Possible cause	Remediation
Producing wavy cuts	1. Inadequate blade tension. 2. Improper blade guide set up. 3. Improper blade tracking. 4. Sap build up on blade. 5. Dull blade. 6. Pushing mill too quickly.	1. Tighten blade 2. Adjust blade guidance. 3. Adjust blade tracking. 4. Install new blade and ensure to run always with blade lubrication. 5. Install new blade. 6. Slow feed rate down and push head slower through log.
Last board is tapered or narrow in the middle.	Tracks are not levelled.	Level the tracks
Blade comes off of band wheels	1. Inadequate blade tension. 2. Improper blade guide set up. 3. Improper blade tracking. 4. Belts are worn. 5. Dull blade. 6. Pushing mill too quickly.	1. Tighten blade 2. Adjust blade guidance. 3. Adjust blade tracking. 4. Install new belts. 5. Install new blade. 6. Slow feed rate down and push head slower through log.
Blades are breaking.	1. Too many blade sharpening's. 2. Inadequate blade tension. 3. Improper blade guide set up. 4. Improper blade tracking. 5. Pushing mill too quickly.	1. Install new blade 2. Adjust blade tension 3. Adjust blade guidance. 3. Adjust blade tracking. 4. Install new belts. 5. Slow feed rate down and push head slower through log.
Blade is slowing down or stopping when milling	1. Inadequate blade tension. 2. Improper drive belt tension. 3. Pushing mill too quickly.	1. Tighten blade 2. Adjust V-Belt tension 3. Slow feed rate down and push head slower through log
Mill is not cutting/cutting very slowly.	1. Dull blade. 2. Blade-teeth are backwards.	1. Install new blade 2. Assemble blade correct
Mill is vibrating excessively.	1. Log is not clamped securely. 2. Belts are deformed. 3. Bandwheel bearing issue. 4. Pushing mill too quickly. 5. Loose bolts.	1. Ensure log is clamped firmly resting on log bunks and against log supports. 2. Install new Belts 3. Install new band wheel bearings 4. Slow feed rate down when milling. 5. Check all bolts to ensure they are tight.

33 SCHALTPLAN / WIRING DIAGRAM / SCHÉMA ÉLECTRIQUE / DIAGRAMA DE CABLEADO

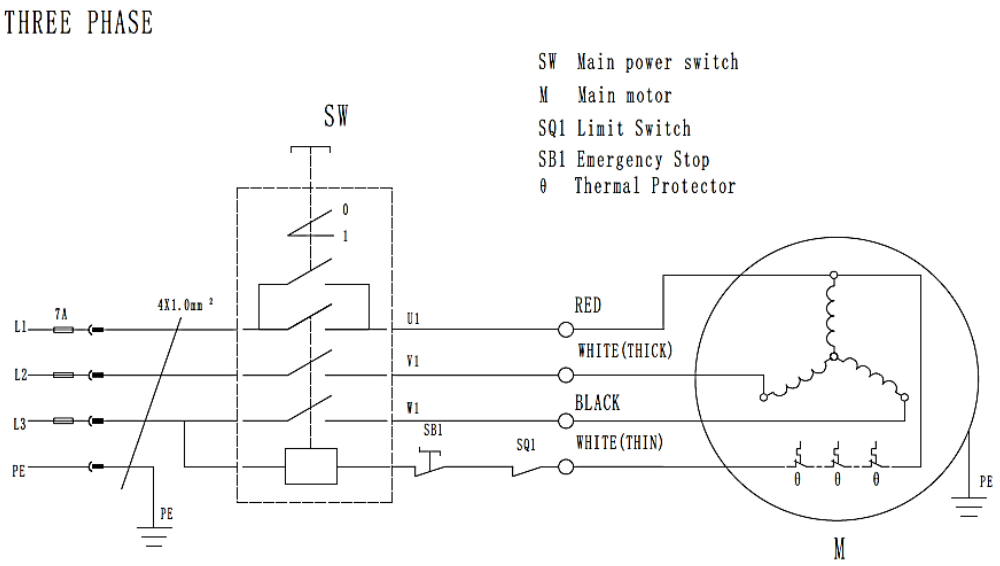

34 ERSATZTEILE / SPARE PARTS / PIECES DE RECHANGE / PIEZAS DE RECAMBIO

34.1 Ersatzteilbestellung / Spare parts order / Commande de pièces détachées / Pedido de piezas

(DE) Mit HOLZMANN-Ersatzteilen verwenden Sie Ersatzteile, die ideal aufeinander abgestimmt sind. Die optimale Passgenauigkeit der Teile verkürzen die Einbauzeiten und erhöhen die Lebensdauer.

HINWEIS

Der Einbau von anderen als Originalersatzteilen führt zum Verlust der Garantie! Daher gilt: Beim Tausch von Komponenten/Teile nur vom Hersteller empfohlene Ersatzteile verwenden.

Bestellen Sie die Ersatzteile direkt auf unserer Homepage – Kategorie ERSATZTEILE.

oder kontaktieren Sie unseren Kundendienst

- über unsere Homepage – Kategorie SERVICE/NEWS/FAQ – ERSATZTEILANFORDERUNG,
- per Mail an service@holzmann-maschinen.at.

Geben Sie stets Maschinentype, Ersatzteilnummer sowie Bezeichnung an. Um Missverständnissen vorzubeugen, empfehlen wir, mit der Ersatzteilbestellung eine Kopie der Ersatzteilzeichnung beizulegen, auf der die benötigten Ersatzteile eindeutig markiert sind, falls Sie nicht über den Online-Ersatzteilkatalog anfragen.

(EN) With original HOLZMANN spare parts you use parts that are attuned to each other shorten the installation time and elongate your products lifespan.

NOTE

The installation of parts other than original spare parts leads to the loss of the guarantee! Therefore: When replacing components/parts, only use spare parts recommended by the manufacturer.

Order the spare parts directly on our homepage – category SPARE PARTS or contact our customer service

- via our Homepage – category SERVICE/NEWS/FAQ - SPARE PARTS REQUEST,
- by e-mail to service@holzmann-maschinen.at.

Always state the machine type, spare part number and designation. To prevent misunderstandings, we recommend that you add a copy of the spare parts drawing with the spare parts order, on which the required spare parts are clearly marked, especially when not using the online-spare-part catalogue.

(FR) Les pièces de rechange HOLZMANN sont conçues pour correspondre idéalement. La précision d'ajustage optimale des pièces réduisent les temps de pose et augmente la durée de vie.

AVIS

Le montage de pièces autres que les pièces de rechange d'origine entraîne la perte de la garantie !

Par conséquent, la règle est la suivante : Utiliser uniquement des pièces de rechange d'origine pour le remplacement des composants/pièces

Pour commander des pièces de rechange, veuillez utiliser le formulaire de service à la fin de ces instructions. Toujours indiquer le type de machine, le numéro de pièce de rechange et la désignation. Afin d'éviter tout malentendu, nous vous recommandons de joindre une copie du plan des pièces détachées à la commande de pièces détachées, sur laquelle les pièces détachées requises sont clairement indiquées.

Vous pouvez aussi utiliser l'option de commande en ligne via le catalogue de pièces détachées ou le formulaire de demande de pièces détachées sur notre page d'accueil.

Pour l'adresse de commande, voir Adresses du service à la clientèle dans l'avant-propos de la présente documentation.

Vous pouvez trouver le catalogue électronique des pièces détachées sur notre page d'accueil (pièces détachées)

(ES) Con las piezas de recambio de Holzmann, utiliza piezas de recambio que se ajustan perfectamente entre sí. El ajuste óptimo de los componentes acorta el tiempo de instalación y aumenta la vida útil.

AVISO

¡La instalación de piezas de recambio no originales lleva a la pérdida de garantía!

Por lo tanto: Al llevar a cabo la sustitución de componentes/piezas, utilice únicamente piezas de recambio originales

Para pedir piezas de recambio utilice el formulario del servicio de atención al cliente que encontrará al final del presente manual. Indique siempre el tipo de máquina, la referencia de la pieza de recambio y la denominación. Para evitar malentendidos, se recomienda adjuntar al pedido una copia del esquema de piezas de recambio en el que se marque claramente las piezas de recambio necesarias.

O utilice la opción de pedido online a través del catálogo de piezas de recambio o del formulario de solicitud de piezas de recambio que encontrará en nuestra página web

Encontrará la dirección de pedidos en las direcciones del servicio postventa que se encuentra en el prólogo de esta documentación.

Encontrará el catálogo electrónico de piezas de recambio en nuestra página web (piezas de recambio)

35 ZUBEHÖR / ACCESSORIES

(DE) Optionales Zubehör finden Sie online auf der Produktseite, Kategorie

EMPFOHLENE PRODUKTE.

(EN) Optional accessories can be found online on the product page, category RECOMMENDED PRODUCTS.

35.1 Explosionszeichnung / Exploded view / Vue éclatée / Vista de despiece

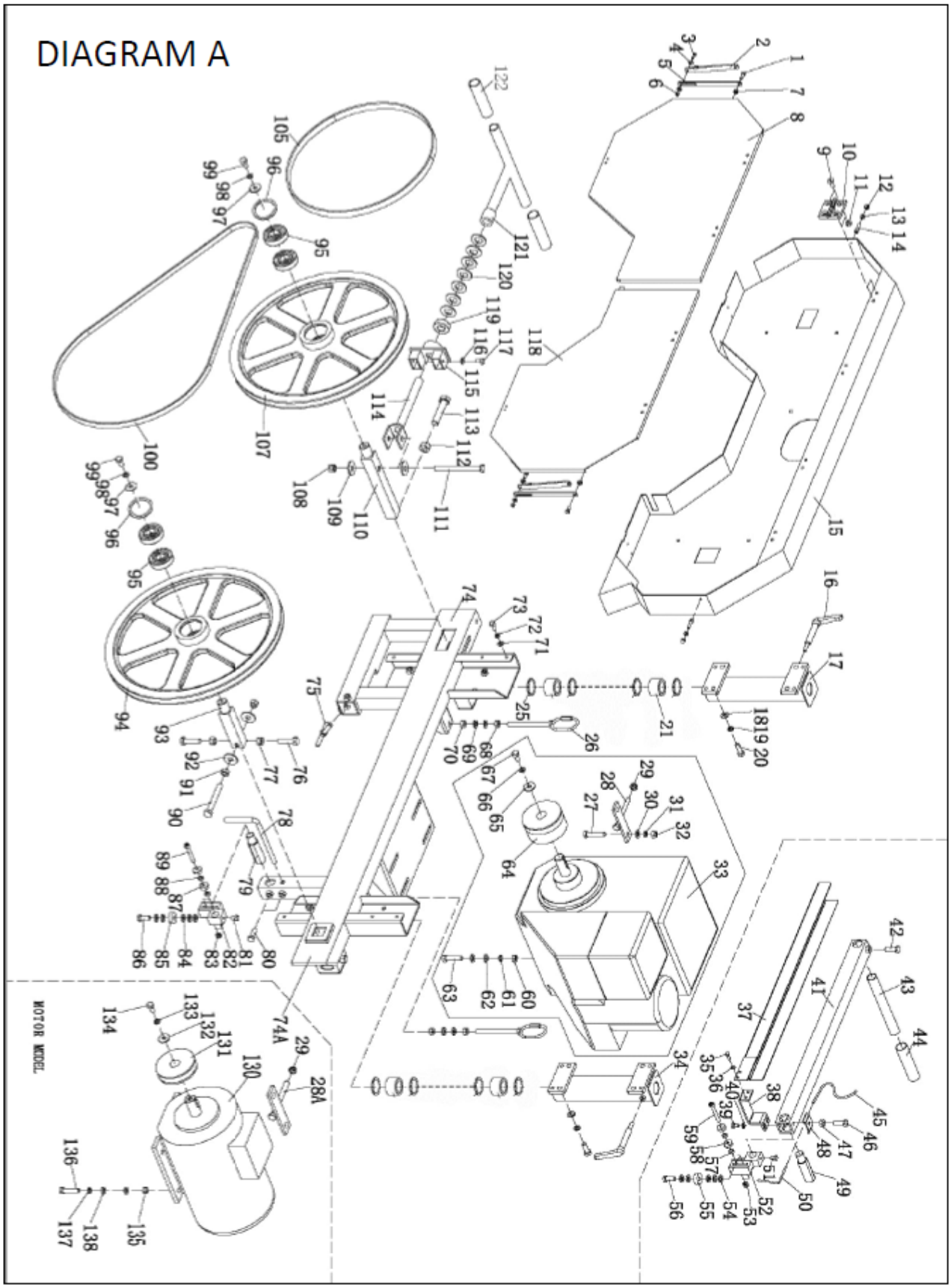

DIAGRAM A

PART NO.	DESCRIPTION	PART NO.	DESCRIPTION	PART NO.	DESCRIPTION
1	HEX BOLT M6X16	47	HEX NUT M10	90	HEX BOLT M12X100
2	BRACKET PLATE No.1	48	CLAMP PLATE	91	HEX NUT M12
3	HEX BOLT M5X16	49	GUIDE SHAFT	92	BIG WASHER 12
4	WASHER 5	50	COOLING TUBE	93	SHAFT FOR DRIVE WHEEL
5	BRACKET PLATE No.2	51	HEX BOLT M8X12	94	SAW WHEEL
6	HEX LOCK NUT M5	52	GUIDR BLOCK FRONT	95	BEARING 6305
7	HEX LOCK NUT M6	53	HEX LOCK NUT M8	96	CIRCLIP FOR HOLE
8	PROTECTIVE DOOR L	54	WASHER 10mm	97	BIG WASHER 10
9	SUNK HEAD SCREW M8X2(	55	BEARING 6200	98	SPRING WASHER 10
10	HINGE	56	HEX BOLT M10X25	99	HEX BOLT M10X20
11	HEX NUT M8	57	SPACER BUSH	100	V-BELT BX79
12	HEX CAP NUT M6	58	BEARING 608	105	V-BELT BX58
13	HEX NUT M6	59	ALLEN SCREW M8X55	107	SAW WHEEL
14	ALLEN SCREW M6X25	60	HEX NUT M10	108	HEX LOCK NUT M12
15	PROTECTIVE COVER	61	SPRING WASHER 10	109	BIG WASHER 12
16	LOCK HANDLE	62	WASHER 10mm	110	SHAFT FOR IDLE WHEEL
17	SLIDE BUSH SEAT No.2	63	HEX BOLT M10X45	111	HEX BOLT M12X130
18	WASHER 10	64	CLUTCH	112	HEX NUT M16
19	SPRING WASHER 10	65	BIG WASHER 10	113	HEX BOTL M16X80
20	HEX BOLT M10X30	66	SPRING WASHER 10	114	TENSION PLATE
21	BUSH FOR LOCK	67	HEX BOLT M10	115	END CAP FOR MAIN TUBE
25	CIRCLIP FOR HOLE	68	HEX NUT M10	116	WASHER 8
26	LIFT RING	69	WASHER 10mm	117	HEX BOTL M8X16
27	HEX BOLT M10X50	70	HEX NUT M10	118	PROTECTIVE DOOR R
28	TENSION BOARD	71	WASHER 8mm	119	THRUST BALL BEARING
29	HEX NUT M8	72	SPRING WASHER 8	120	DISC SPRINGS
30	WASHER 10	73	HEX BOLT M8X20	121	TENSION HANDLE
31	SPRING WASHER 10	74	MAIN FRAME	122	HANDLE COVER
32	HEX NUT M10	75	LOCK SCREW		
33	ENGINE	76	HEX BOLT M12X45		
34	SLIDE BUSH SEAT No.1	77	HEX NUT M12	130	MOTOR
35	HEX BOLT M6X16	78	LOCK HOOK	131	MOTOR PULLY
36	WASHER 6	79	GUIDE SHAFT	132	WASHER 10
37	FRONT GUARD	80	HEX BOLT M10X30	133	SPRING WASHER 10
38	GUARD SEAT	81	HEX BOLT M8X12	134	HEX BOLT M10
39	HEX BOLT M8X12	82	GUIDR BLOCK REAR	135	HEX NUT M10
40	WASHER 8	83	HEX LOCK NUT M8	136	HEX BOLT M10X35
41	GUIDE PIPE	84	WASHER 10mm	137	SPRING WASHER 10
42	HEX BOLT M10X30	85	BEARING 6200	138	WASHER 10
43	HANDLE	86	HEX BOLT M10X25	28A	TENSION BOARD(MOTOR)
44	HANDLE COVER	87	BEARING 608	74A	MAIN FRAME(MOTOR)
45	COOLING PIPE	88	SPACER BUSH		
46	HEX BOLT M10X30	89	ALLEN SCREW M8X55		

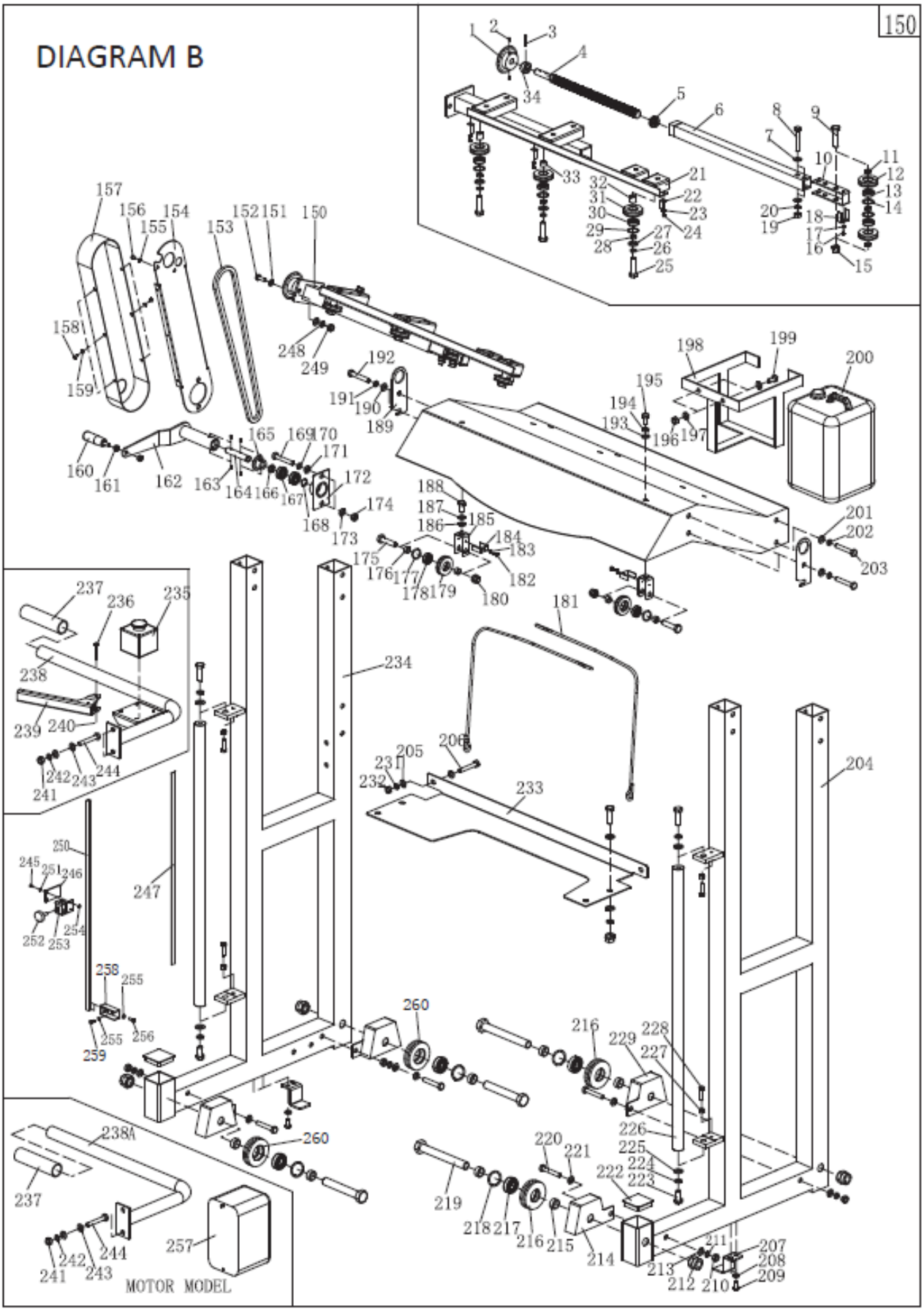
DIAGRAM B
150
MOTOR MODEL

DIAGRAM B

PART NO.	DESCRIPTION
150	LIFT ASSEMBLY
150-1	BIG CHAIN WHEEL
150-2	SET SCRW M6X8
150-3	SPRING PIN
150-4	THREADED SCREW
150-5	THRUST BEARING
150-6	INNER SLIDING TUBE
150-7	WASHER 10
150-8	HEX BOLT M10X55
150-9	HEX BOLT M12X55
150-10	PULLY BRACKET
150-11	SPACER BUSH NO.1
150-12	PULLY
150-13	BEARING 6200
150-14	CIRCLIP FOR HOLE
150-15	HEX LOCK NUT M12
150-16	PAN HEAD SCREW M4X6
150-17	WASHER 4MM
150-18	U-SHAPED PLATE
150-19	HEX NUT M10
150-20	SPRING WASHER 10
150-21	FIXED SLIDING TUBE
150-22	ANGLE PLATE
150-23	WASHER 4MM
150-24	PAN HEAD SCREW M4X6
150-25	HEX BOLT M12X45
150-26	SPRING WASHER 12
150-27	WASHER 12MM
150-28	SPACER BUSH NO.1
150-29	CIRCLIP FOR HOLE
150-30	BEARING 6001
150-31	PULLY
150-32	SPACER BUSH NO.3
150-33	SPACER BUSH NO.2
150-34	FIXED BUSH
151	WASHER 10
152	HEX BOLT M10X25
153	CHAIN
154	CHAIN GUARD
155	WASHER 5
156	PAN HEAD SCREW M5X8
157	CHAIN COVER
158	PAN HEAD SCREW M5X8
159	WASHER 5
160	LIFT HANDLE
161	HEX NUT
162	LIFT ARM
163	SET SCRW M6X8
164	CHAINWHEELS SHAFT
165	SMALL CHAIN WHEEL
166	SPACER WASHER

PART NO.	DESCRIPTION
168	CIRCLIP FOR SHAFT
169	HEX BOLT M10X80
170	SPRING WASHER 10
171	WASHER 10
172	CHAINWHEEL SEAT
173	WASHER 10
174	HEX NUT M10
175	HEX BOLT M12X50
176	SPCER BUSH
177	CIRCLIP FOR HOLE
178	BEARING 6001
179	PULLY
180	HEX LOCK NUT M12
181	STAINLESS WIRE
182	PAN HEAD SCREW M4X6
183	WASHER 4
184	U-SHAPED PLATE
185	PULLY BRACKER 2
186	WASHER 10
187	SPRING WASHER 10
188	HEX BOLT M10X20
189	LIFTING EYE
190	WASHER 10
191	SPRING WASHER 10
192	HEX BOLT M10X60
193	WASHER 10
194	SPRING WASHER 10
195	HEX BOLT M10X20
196	HEX NUT M10
197	WASHER 10
198	BUCKET BRACKET
199	HEX BOLT M10X20
200	WATER BUCKET
201	WASHER 10
202	SPRING WASHER 10
203	HEX BOLT M10X80
204	LEFT BRACKET
205	WASHER 10
206	HEX BOLT M10X60
207	ANTI-SWAY BAR
208	WASHER 8
209	HEX BOLT M8X20
210	HEX NUT M10
211	SPRING WASHER 10
212	HEX LOCK NUT M20
213	WASHER 10
214	WHEEL BRACKET NO.2
215	SPACER BUSH, WHEEL
216	WHEEL A
217	BEARING 6004
218	CIRCLIP FOR HOLE

PART NO.	DESCRIPTION
220	HEX BOLT M10X80
221	WASHER 10
222	TUBE PLUG
223	HEX BOLT M12X40
224	SPRING WASHER 12
225	WASHER 12
226	GUIDE BAR
227	HEX NUT M8
228	HEX BOLT M8X30
229	WHEEL BRACKET NO.1
231	SPRING WASHER 10
232	HEX NUT M10
233	CROSS BOARD
234	RIGHT BRACKET
235	EMERGENCY STOP
236	HEX BOLT M6X45
237	HANDLE COVER
238	PUSH-PULL HANDLE
239	SPEED CONTROL
240	HEX LOCK NUT M6
241	HEX NUT M10
242	SPRING WASHER 10
243	WASHER 10
244	HEX BOLT M10X80
245	PAN HEAD SCREW M4X12
246	POINTER FOR HEIGHT
247	HEIGHT SCALE
248	SPRING WASHER 10
249	HEX NUT M10
250	SQUARE ROD
251	WASHER 4
252	HANDLE M8X30
253	SLIDING PART
254	HEX NUT M4
255	WASHER 6
256	HEX BOLT M6X20
257	SWITCH BOX
258	SQUARE ROD SEAT
259	ALLEN SCREW M6X16
260	WHEEL B
238A	PUSH-PULL HANDLE

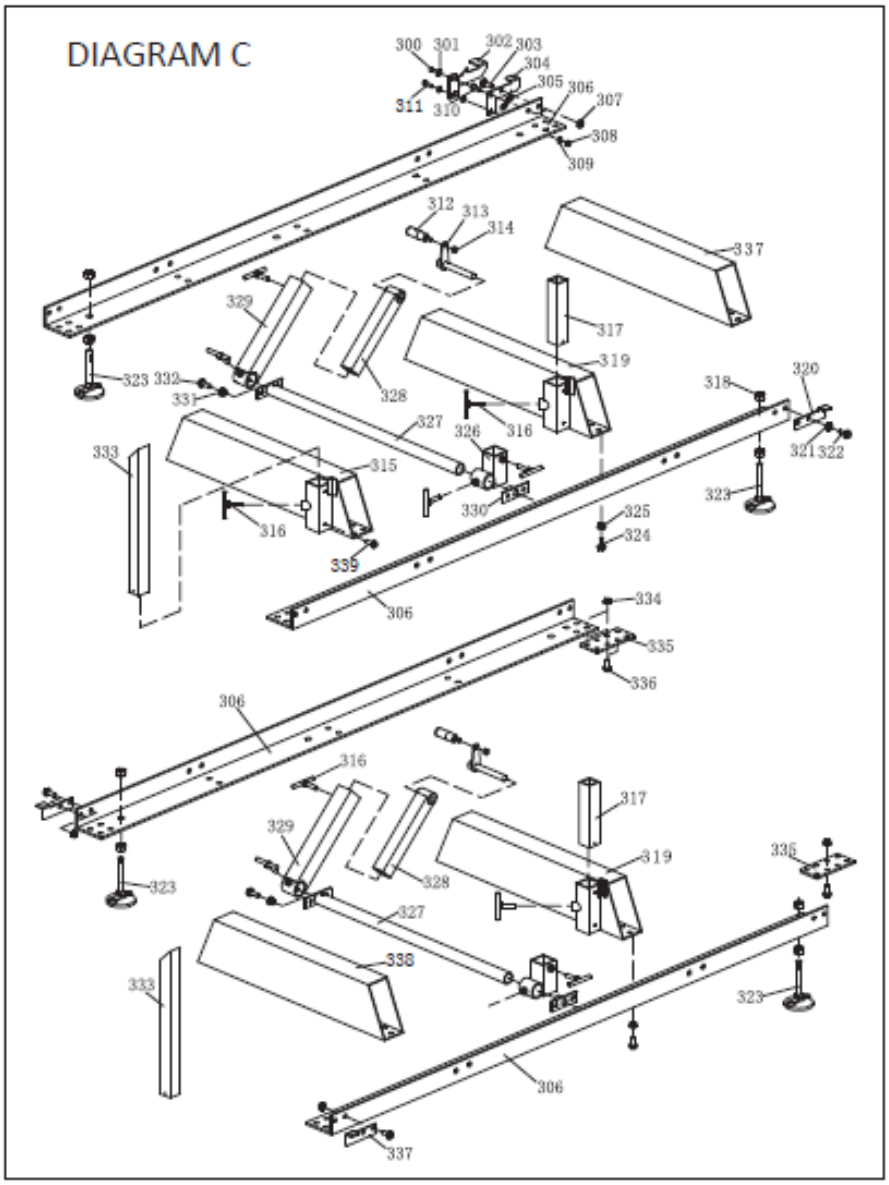

DIAGRAM C

PART NO.	DESCRIPTION		PART NO.	DESCRIPTION
300	SUNK HEAD SCREW M6X8		320	STOPPER NO.2
301	SPECIAL WASHER		321	HEX FLANGE NUT M10
302	FOOT PEDAL		322	HEX FLANGE BOLT M10X25
303	SPECIAL BOLT		323	FOOT PAD
304	STOPPER NO.3		324	HEX FLANGE BOLT M10X25
305	SPRING		325	HEX FLANGE NUT M10
306	RUNWAY		326	SLIDING CLAMP NO.2
307	HEX FLANGE NUT M10		327	SLIDING BAR
308	HEX LOCK NUT M8		328	MOVEABLE CLAMP
309	WASHER 8		329	SLIDING CLAMP NO.1
310	HEX FLANGE BOLT M10X25		330	SLIDING BAR SEAT
311	HEX BOLT M8X25		331	HEX FLANGE NUT M10
312	LOCK HANDLE		332	HEX FLANGE BOLT M10X25
313	CLAMP SCREW		333	FIXED CLAMP NO.2
314	HEX NUT		334	HEX FLANGE NUT M10
315	SUPPORT TUBE A		335	JOINT PLATE
316	LOCK SCREW		336	HEX FLANGE BOLT M10X25
317	FIXED CLAMP NO.1		337	STOPPER NO.1
318	HEX NUT M16		338	SUPPORT TUBE C
319	SUPPORT TUBE B		339	HEX BOLT M8X30

38 GUARANTEE TERMS (EN)

1.) Warranty

For mechanical and electrical components Company HOLZMANN MASCHINEN GmbH grants a warranty period of 2 years for DIY use and a warranty period of 1 year for professional/industrial use - starting with the purchase of the final consumer (invoice date).

In case of defects during this period which are not excluded by paragraph 3, Holzmann will repair or replace the machine at its own discretion.

2.) Report

In order to check the legitimacy of warranty claims, the final consumer must contact his dealer. The dealer has to report in written form the occurred defect to HOLZMANN MASCHINEN GmbH. If the warranty claim is legitimate, HOLZMANN MASCHINEN GmbH will pick up the defective machine from the dealer. Return shipments by dealers which have not been coordinated with HOLZMANN MASCHINEN GmbH will not be accepted. A RMA number is an absolute must-have for us - we won‘t accept returned goods without an RMA number!

3.) Regulations

a) Warranty claims will only be accepted when a copy of the original invoice or cash voucher from the trading partner of HOLZMANN MASCHINEN GmbH is enclosed to the machine. The warranty claim expires if the accessories belonging to the machine are missing.

b) The warranty does not include free checking, maintenance, inspection or service works on the machine. Defects due to incorrect usage through the final consumer or his dealer will not be accepted as warranty claims either.

c) Excluded are defects on wearing parts such as carbon brushes, fangers, knives, rollers, cutting plates, cutting devices, guides, couplings, seals, impellers, blades, hydraulic oils, oil filters, sliding jaws, switches, belts, etc.

d) Also excluded are damages on the machine caused by incorrect or inappropriate usage, if it was used for a purpose which the machine is not supposed to, ignoring the user manual, force majeure, repairs or technical manipulations by not authorized workshops or by the customer himself, usage of non-original Holzmann spare parts or accessories.

e) After inspection by our qualified staff, resulted costs (like freight charges) and expenses for not legitimated warranty claims will be charged to the final customer or dealer.

f) In case of defective machines outside the warranty period, we will only repair after advance payment or dealer’s invoice according to the cost estimate (incl. freight costs) of HOLZMANN MASCHINEN GmbH.

g) Warranty claims can only be granted for customers of an authorized HOLZMANN MASCHINEN GmbH dealer who directly purchased the machine from HOLZMANN MASCHINEN GmbH. These claims are not transferable in case of multiple sales of the machine.

4.) Claims for compensation and other liabilities

The liability of company HOLZMANN MASCHINEN GmbH is limited to the value of goods in all cases.

Claims for compensation because of poor performance, lacks, damages or loss of earnings due to defects during the warranty period will not be accepted.

HOLZMANN MASCHINEN GmbH insists on its right to subsequent improvement of the machine.

SERVICE

After Guarantee and warranty expiration specialist repair shops can perform maintenance and repair jobs. But we are still at your service as well with spare parts and/or product service. Place your spare part/repair service cost inquiry by

- Mail to service@holzmann-maschinen.at.
- Or use the online complaint order formula provided on our homepage – category service/news/faq.